SCA4000A

CRAWLER CRANE

- 440 USt (400 Mt)
- 324.8 ft (91 m)
- 275.6 ft + 265.7 ft (84 m + 81 m)





SCA4000A
SANY Crawler Crane

P03	**Main Characteristics**	• Product Specification • Safety Devices
P09	**Technical Parameters**	• Major Performance & Specifications • Outline Dimension • Transport Dimensions • Machine and Boom Assembly
P29	**Configurations**	• Configurations • H Configuration • HDB Configuration • HJ Configuration • HJDB Configuration • HJFJ Configuration • FJh Configuration • FJhDB Configuration • LJ Configuration • LJDB Configuration

A

SCA4000A
SANY CRAWLER CRANE
440UST (400 mt) LIFTING CAPACITY
MADE FOR AMERICA

Main Characteristics

- Page 04 Product Specification
- Page 07 Safety Devices

Product Specification

Engine

- Model: Cummins X12 C400 Diesel engine;
- Type: 4-stroke, water-cooled, vertical in-line 6 cylinders, direct injection, turbo-charger, intercooler, complied with US EPA Tier F4(f) Emission Standard;
- Displacement: 732 in3 (12L);
- Max. Rated Power: 400 HP/2100rpm;
- Max. Torque: 1,600 ft-lb/1400rpm;
- Starter: 24V-8 HP;
- Radiator: Fin type aluminum plate core;
- Air cleaner: Dry type system with main filter element, safety element and resistance indicator;
- Throttle: Electrically controlled hand and foot throttle;
- Fuel filter: Replaceable paper element;
- Batteries: Two 12V×180Ah capacity batteries, connected in series (24V system);
- Fuel tank capacity: 219Gal (830L).

Hydraulic System

- Main pumps: Three variable displacement piston pumps provide power for the main machine functions;
- Gear Pumps: Two gear pumps provide power for radiator and control circuit;
- Control: Electrically controlled positive hydraulic flow control allows for safe and precise multifunction operation;
- Oil Cooler: Fan cooled heat exchanger provides multi stage hydraulic oil cooling;
- Filter: Peak flow, high efficiency filter with bypass valve and replacement filter indicator. Indicator will remind user when its time to replace filter;
- Max. pressure of system: 4,786 psi;
- Main/aux. hoist and travel system: 4,796 psi;
- Swing system: 4,602 psi;
- Control system: 508 psi;
- Hydraulic Tank Capacity: 211Gal (800L).

Main and Auxiliary Load Hoisting Mechanism

- The main and aux. winches are driven independently and feature a compact design that is easy to assemble. The maintenance-free wet brake ensure safe winch operation;
- Variable displacement hydraulic motor is load sensing and adjust automatically to provide high line speed while maintaining line pull;
- Rotation resistance rope provides safe load lifting and long service life;
- Wire rope button end termination provides convenient and easy socket installation;
- Free fall winches are optional.

Main load hoist mechanism	Drum diameter	24.64"(626mm)
	Rope speed on the outermost work layer	0~459.3 ft/min (0~140m/min)
	Steel rope diameter	26mm
	Steel rope length of main load hoist	2,952.8' (900m)
	Rated tension of single rope	33,069 lbs. (15mt)
Aux. load hoist mechanism	Drum diameter	24.64"(626mm)
	Rope speed on the outermost work layer	0~459.3 ft/min (0~140m/min)
	Steel rope diameter	26mm
	Steel rope length of aux. load hoist	2,952.8' (900m)
	Rated tension of single rope	33,069 lbs. (15mt)

Boom/Jib/Hoist Mechanism

- Boom hoist, luffing jib hoist and superlift mast winches are driven separately by motor via gearbox;
- Spring loaded brake is hydraulic released;
- Winch drum laggings are grooved for multilayer spooling.

Boom hoist mechanism	Drum diameter	25.24"(641mm)
	Rope speed on the outermost work layer	(0~213.3")×2 ft/min (0~65)×2m/min
	Steel rope diameter	26mm
	Steel rope length of boom hoist	1,804.5' (550m)
Jib luffing mechanism	Drum diameter	25.24"(641mm)
	Rope speed on the outermost work layer	0~328.1 ft/min (0~100m/min)
	Steel rope diameter	26mm
	Steel rope length of jib luffing	2,165.4' (660m)
Superlift mast luffing	Drum diameter	25.24"(641mm)
	Rope speed on the outermost work layer	0~328.1 ft/min (0~100m/min)
	Steel rope diameter	26mm
	Steel rope length of superlift luffing	2,821.5' (860m)

In the interest of continual equipment development, SANY America Inc. reserves the right to change these specifications at any time without prior notification.

Product Specification

Swinging Mechanism

- Two large swing motors drive a planetary gear reducer to provide smooth 360° rotation. The swing speed is variable and the max speed is 1.4 rpm. Swing system has free swing and auto brake mode. Swing brake is automatic applied when control lever is in neutral to prevent movement during travel and transportation. Swing bearing is a three-row roller with external gears.

Cab and Control

- The new operator cab is designed with PORSCHE and features a smooth outline that has a distinct brand identification. The spacious cab has a fully enclosed steel frame, sliding door, and large areas of high strength tempered glass that provide the operator a wide field of vision. The cab tilts up 25° providing the operator a panorama view and reducing fatigue. The cab and control layout allow for ergonomic operation keeping the operator comfortable;
- Monitor: Dual touch screen display with simple user friendly interface;
- Armrest Console: Control handles electrical switches, emergency stop, and ignition switch are located on the left and right. Arm console can be adjusted independent of the seat;
- Seat: Multi-way adjustable floating seat;
- HVAC: Powerful air conditioner and heater with optimized vent locations. Air conditioner can drop cab temperature from 131°F (55°C) to 81.5°F (27.5°C) within 20 minutes;
- Cameras: Multiple cameras can be displayed on the monitor at the same time. This provides the operator with a real time view of winches, right side of machine, rear of machine , and view from boom tip;
- Electric over hydraulic dual axis controls for travel, swing, main, aux, boom hoist, and luffing jib hoist winches.

Counterweight

- Counterweight tray and block nest together for easy assembly, disassembly and transportation;
- Rear counterweight: total weight 330.6Klb (150mt), 22 Klb (10mt) counterweight block x 12, 33Klb (15mt) counterweight tray x 2;
- Carbody counterweight: total weight 88.2Klb (40mt), 22 Klb (10mt) x 4; Superlift counterweight: Total weight 462.9 Klb (210mt), 22 Klb (10mt) counterweight block x 20, 19.8Klb (9mt) counterweight tray.

Name	Qty.	Length ft (m)	Width ft (m)	Height ft (m)	Unit Weight lbs. (mt)	Total Weight lbs. (mt)
Carbody Counterweight	4	19 (5.80)	5.6 (1.70)	1.1 (0.33)	22,046 (10)	88.185 (40)
Rear Counterweight	12	9.4 (2.85)	7.9 (2.40)	1.6 (0.49)	22,046 (10)	330,693 (150)
Rear Counterweight Tray	2	10.5 (3.20)	9.3 (2.83)	5.9 (1.80)	33,069 (15)	
Superlift Counterweight	20	9.4 (2.85)	7.9 (2.40)	1.6 (0.49)	22,046 (10)	462,971 (210)
Superlift Counterweight Tray	1	32.6 (9.95)	8.9 (2.70)	7.2 (2.20)	19,842 (9)	

Carbody

- Side frames pin with hydraulic cylinders to the carbody for easy assembly and disassembly. High-strength steel welded frame is designed with a large chassis to improve the stability of the crane.

Crawler Assembly

- Each side frame is equipped with an independent travel driving motor. The variable speed travel system is configured with speed options to meet various requirements: low speed provides max tractive effort and provides 100% pick and carry. High speed provides fast job site transfer. Track tension can be adjusted with provided hydraulic jack and shims.

Track Pad

- Manufactured by advance casting techniques and materials providing high strength and excellent wear resistance;
- 47.2in (1200mm) wide and each side frame has 81 track pads.

Jack Cylinder

- Standard jack cylinders make jobsite transport easier.

Boom

- Lattice structure with high-strength steel chords. Each section is pinned together with pins;
- The length of the boom ranges from that 78.7ft (24m) of the basic boom to the maximum length 403.5ft (123m) and it can be incrementally changed by 19.7ft (6m).

Fixed Jib

- Lattice structure with high-strength steel chords. Each section is pinned together with pins;
- The length of fixed jib is 29.5ft (9m) and can be installed on boom from 236.2ft (72m)–295.3ft (90m).

Short Heavy Jib

- Lattice structure with high-strength steel chords. Each section is pinned together with pins;
- The length of short heavy jib is 29.5ft (9m) and can be installed on boom from 78.7ft (24m)–118.1ft (36m).

In the interest of continual equipment development, SANY America Inc. reserves the right to change these specifications at any time without prior notification.

Product Specification

Luffing Jib

- Lattice structure with high-strength steel chords. Each section is pinned together with pins;
- The length of the luffing jib ranges from 68.9ft (21m) to 265.7ft (81m), incrementally changed by 19.7ft (6m), which can be installed on boom from 118.1ft (36m) -275.6ft (84m).

Superlift Device

- Lattice structure with high-strength steel chords. Each section is pinned together with pins;
- The length of the superlift mast is 98.4ft (30m) consisting of mast base 39.4ft (12m), mast extension 19.7ft (6m), and mast top 39.4ft (12m).

Hook Block

- 5 different hook block capacities are available:

Hook Model	Lifting Capacity Klbs. (mt)	Quantity	No. of Sheaves	Unit Weight lbs. (mt)
440UST	881.8 (400)	1	2×9	23,149 (10.5)
286UST	573.2 (260)	1	9	10,582 (4.8)
176UST	352.7 (160)	1	5	8,378 (3.8)
55UST	121.3 (55)	1	1	3,748 (1.7)
17.6UST ball	35.3 (16)	1	-	1,984 (.9)

- The hook height limit:

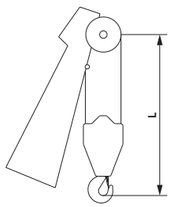

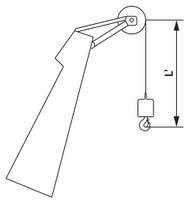

Hook Model	Length ft. (m)
440UST	24.9 (7.6)
286UST	21 (6.4)
176UST	20.3 (6.2)
55UST	18.4 (5.6)

Hook	Length ft. (m)
17.6 UST ball	15.1 (4.6)

Over-hoist Protection (Anti Two Block)

- It is used to prevent the over-hoist of the hook. When the lifting hook is raised to a certain height, the limit switch is activated, and hook hoisting will be automatically cut off by the control system. Warning will be displayed in monitor and alarm will sound. At this moment, only hook lowering is allowed to prevent over-hoist action.

Over-release Protection Device (Third Wrap Indicator)

- It is used to prevent the wire rope over-release. When the wire rope is released to the last three wraps, the limit switch will activate, and the releasing of rope will be automatically stopped by the control system. Warning will be displayed in monitor and alarm will sound. At this moment, only rope retraction is allowed to prevent over release action.

In the interest of continual equipment development, SANY America Inc. reserves the right to change these specifications at any time without prior notification.

Product Specification

Assembly/Work Mode Switch

- In assembly mode, some of the safety devices are bypassed for helping crane assembly, for example, jib lower limit, boom angle limit and overload;
- In work mode, all safety devices are active.

Load Moment Indicator (LMI)

- The proprietary load moment indicator is independently -developed by Sany, which is a specially designed over-load protective system for SCA series crawler crane, with performance structural parameters of all series of crawler cranes directly stored inside, such as bearing curve, boom and jib weight, center of gravity, and other geometrical parameters. This system maximizes the utilization efficiency of the crane while guaranteeing the lifting safety;
- The independent safety control system fully controlled by computer, the LMI can automatically detect the load weight, work radius, and boom angle, compare rated capacity with actual load, actual radius and actual boom angle. In normal operation, the LMI can intelligently determine and cut off the crane from dangerous operation. It also has a black box function and record overload information;
- LMI consists of two 13.6in (345mm) large colorful touchscreens, computer, angle sensors, load sensors and pressure sensors.

Boom/Jib Angle Limit Device

- When the boom angle exceeds 85° or jib angle exceeds 75°, corresponding limit switch will be triggered, and the control system will automatically cut off the boom hoisting. Warning will be displayed in monitor and alarm will sound. At this moment, boom/jib luffing winch won't hoist but it can still lower down;
- When the boom angle is less than 30° or jib down angle is less than 15°, the control system will automatically cut off the boom/jib from further lowering. Warning will be displayed in monitor and alarm will sound. At this moment, boom/jib luffing winch won't be able to lower. This protection is automatically controlled by Load Moment Indicator.

Backstop Device

- The boom and the superlift mast are equipped with a pair of hydraulic backstop cylinders. The high pressure of the cylinder limit boom travel at high angles and provide cushion to prevent vibration.
- The luffing jib rear mast has a pair of backstops to limit backward movement of luffing jib. The luffing jib front mast has pneumatic cylinders that keep tension on the luffing hoist rope.

Camera System

- Standard high-definition cameras on boom tip, on each winch, at the rear of the upper. and left side of upper provide real time monitoring and ensure safe operation. Dual displays in cab can display four camera views at the same time. The boom tip camera can zoom in/out as needed.

Black Box

- It is able to record the operation data and machine movement, and analyze the remaining running conditions and service life of machine based on the actual performance.

Aircraft Warning Light (Pharos)

- Light mounted on the top of boom/jib that flashes at night.

Anemometer

- It is mounted on the top of the boom/jib and displays the wind speed in the monitor in the cab.
- Electronic Level Indicator
- List and trim angles are displayed in real time on the in cab monitor.

In the interest of continual equipment development, SANY America Inc. reserves the right to change these specifications at any time without prior notification.

Safety Devices

Electronic Level Indicator

- List and trim angles are displayed in real time on the in cab monitor.

Lightning Protection Device

- It includes the lightning protection device and the surge protection device, which can effectively protect the electric system elements and workers from lightning.

Hook Latch

- The lifting hook is installed with a baffle plate to prevent wire rope from falling off.

Swing and Traveling Alarm

- During swing and traveling, the alarm will sound to alert the personnel around the crane. The alarm can be shut off through the display.

Hydraulic Function Lock

- If the function lock level is not in work position, all the hydraulic control joysticks are bypassed, which prevents any mis-operation caused by control joystick movement.

Regulation of Engine Power Ultimate Load and Stalling Protection

- The controller can monitor the engine power to prevent stalling.

Engine Status Monitoring

- Shows the engine coolant temperature, fuel level, total working hours, engine oil pressure, engine speed, and battery voltage.

Emergency Stop

- When this button is pressed power supply to whole machine is cut off and all actions are stopped.

Tri-color Load Indicator

- The load indication light has three colors, green, yellow and red, and the real time load status is presented on the display. When the actual load is smaller than 90% of rated load, the green light is on;
- When the actual load is larger than 90% and smaller than 100%, the yellow light is on, the alarm light flashes and sends out intermittent sirens;
- When the actual load reaches 100% of rated load, the red light is on, the alarm light flashes and sends out continuous sirens;
- When the actual load reaches 102% of rated load, the system will automatically cut off the crane operation.

In the interest of continual equipment development, SANY America Inc. reserves the right to change these specifications at any time without prior notification.

B

SCA4000A
LATTICE BOOM CRAWLER CRANE
440UST (400 MT) LIFTING CAPACITY

MADE FOR AMERICA

Technical Parameters

- Page 10 Main Performance & Specifications
- Page 11 Basic Dimensions of Crane
- Page 13 Transportation Dimensions
- page 23 Self-Assembly Plan

> 09

In the interest of continual equipment development, SANY America Inc. reserves the right to change these specifications at any time without prior notification.

Main Performance & Specifications

Main Performance & Specifications of SCA4000A			
Performance Indicators		Unit	Parameter
Boom Configuration	Max. rated lifting capacity	Klb (mt)	881.8 (400)
	Max. rated lifting moment	Klb×ft (mt·m)	848,765×23' (2,695=385×7)
	Max. rated lifting moment (with superlift)	Klb×ft (mt·m)	734,162×52'6" (5,328=333×16)
	Boom length (H)	ft (m)	78.7~275.6 (24~84)
	Boom length (HDB with superlift)	ft (m)	118.1~275.6 (36~84)
	Length of mixed boom (HJ)	ft (m)	147.6~324.8 (45~99)
	Length of mixed boom (HJDB with superlift)	ft (m)	226.4~403.5 (69~123)
	Boom Working Angles	°	30~85
Luffing Jib Configuration	Length of luffing jib (LJ)	ft (m)	68.9~226.4 (21~69)
	Length of luffing jib (LJDB with superlift)	ft (m)	68.9~265.7 (21~81)
	Combination of longest boom+luffing jib (LJDB Configuration)	ft (m)	275.6+265.7 (84+81)
	Luffing Jib Working Angles	°	15~75
Short Heavy Fixed Jib Configuration	Short Heavy Fixed Jib Length	ft (m)	29.5 (9)
	Boom + Short Heavy Fixed Jib (FJh Configuration)	ft (m)	78.7+29.5 (24+9)
	Boom + Fixed jib (FJhDB Configuration)	ft (m)	118'1"+29'6" (36+9)
Fixed Jib Configuration	Mixed Boom + Fixed jib (HJFJ Configuration)	ft (m)	295'3"+29.5 (90+9)
Operation Speed	Main Load Hoist Max Line Speed	ft/min (m/min)	0~459 (0~140)
	Auxiliary Load Hoist Max Line Speed	ft/min (m/min)	0~459 (0~140)
	Boom Hoist Max Line Speed	ft/min (m/min)	(0~213)×2 (0~65)×2
	Luffing Jib Hoist Max Line Speed	ft/min (m/min)	(0~328) (0~100)
	Superlift Hoist Max Line Speed	ft/min (m/min)	(0~328) (0~100)
	Swinging Speed	rpm	0~1.4
	Travel speed	mile/h (km/h)	0~0.6(high)/0~0.2(low) 0~1(high)/0~0.4(low)
Engine	Max power/rated speed	HP/rpm	400/2,100
Transport Parameters	Max. transport dimension of single piece (L × W × H)	ft (m)	39.4 x 9.8 x 10.8 12 x 3 x 3.3
	Max. transport weight of single piece	Klb (mt)	91.1 (41.3)
Other Parameters	Gradeability (with basic boom)	%	15
	Average ground pressure of (basic boom, 330.6 Klb rear counterweight, 88.l Klb carbody weight, and 440UST hook)	PSI	24.2

In the interest of continual equipment development, SANY America Inc. reserves the right to change these specifications at any time without prior notification.

Unit: ft (m)

Outline Dimension

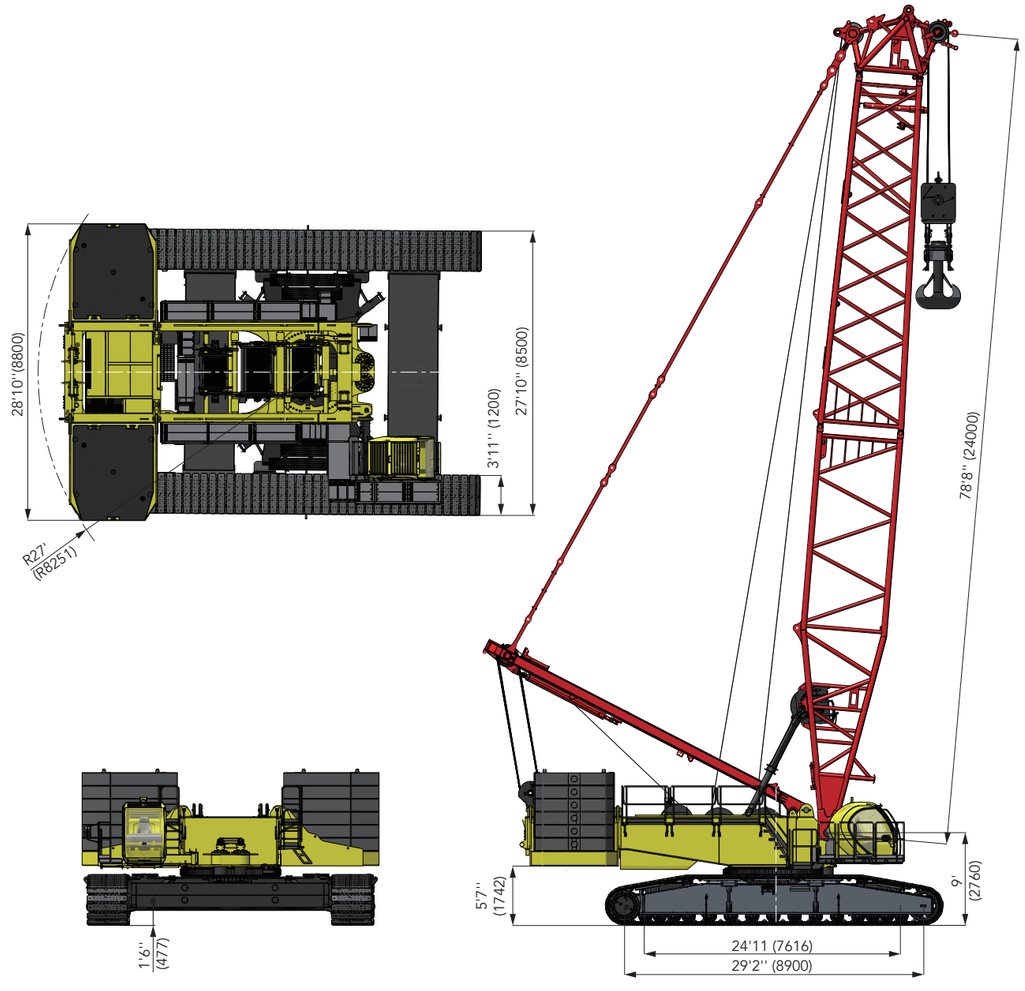

In the interest of continual equipment development, SANY America Inc. reserves the right to change these specifications at any time without prior notification.

Unit: ft (m)

Outline Dimension

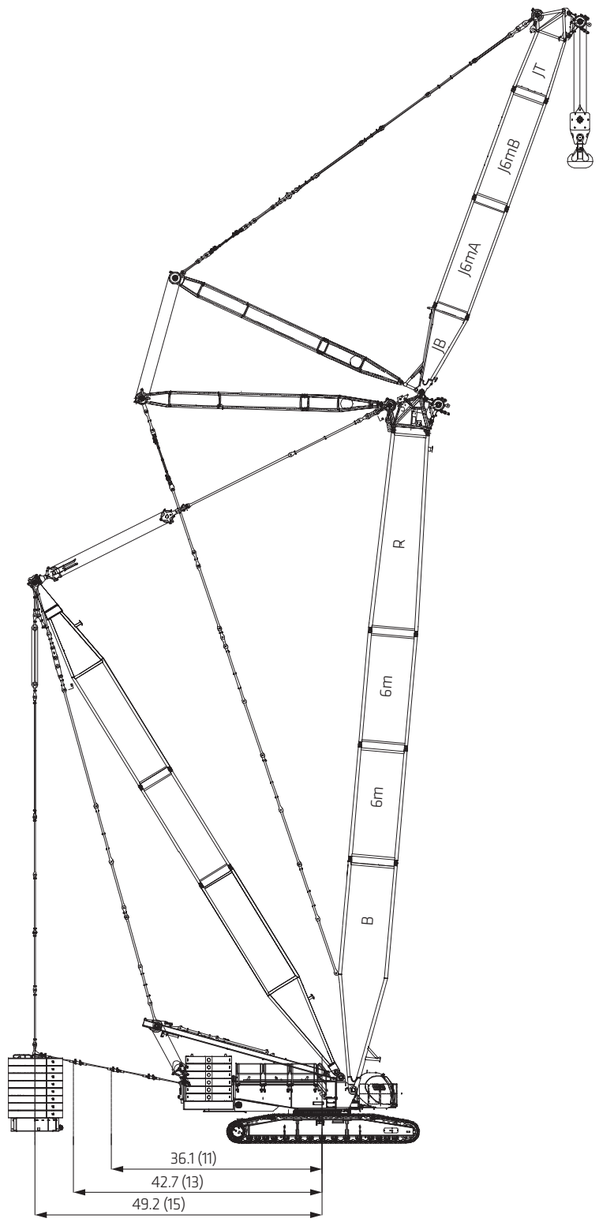

Transport Dimensions

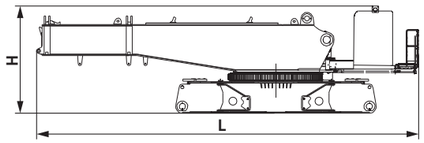

Basic machine	×1
Length (L)	39.4' (12m)
Width (W)	9.8' (3m)
Height (H)	10.8' (3.3m)
Weight	91,051 lbs. (41.3mt)

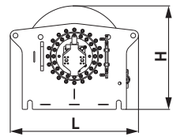

Hoist mechanism	×2
Length (L)	6' (1.83m)
Width (W)	4.3' (1.32m)
Height (H)	3.5' (1.07m)
Weight	12,125 lbs. (5.5mt)

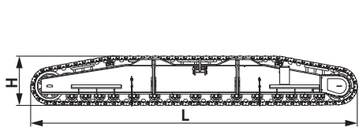

Crawler	×2
Length (L)	33' (10.34m)
Width (W)	5.3' (1.71m)
Height (H)	5' (1.51m)
Weight	58,423 lbs. (26.5mt)

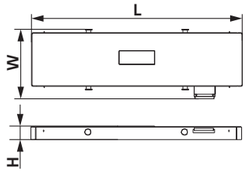

Upper carbody counterweight	×2
Length (L)	19.3' (5.89m)
Width (W)	6.4' (1.94m)
Height(H)	1.2' (0.36m)
Weight	22,046 lbs. (10mt)

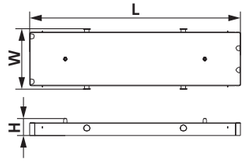

Lower carbody counterweight	×2
Length (L)	19.3' (5.89m)
Width (W)	5.6' (1.70m)
Height (H)	1.2' (0.36m)
Weight	22,046 lbs. (10mt)

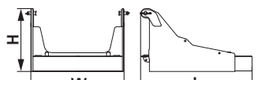

Rear counterweight tray	×2
Length (L)	10.5' (3.20m)
Width (W)	8.8' (2.67m)
Height (H)	5.9' (1.80m)
Weight	33,069 lbs. (15mt)

In the interest of continual equipment development, SANY America Inc. reserves the right to change these specifications at any time without prior notification.
In the interest of continual equipment development, SANY America Inc. reserves the right to change these specifications at any time without prior notification.

Transport Dimensions

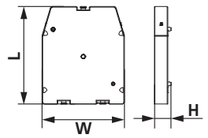

22,045 lbs. (10mt) counterweight block	×32
Length (L)	9.4' (2.85m)
Width (W)	7.9' (2.40m)
Height (H)	1.6' (0.49m)
Weight	22,046 lbs. (10mt)

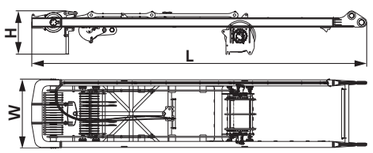

Boom hoist mast with winch	×1
Length (L)	35.7' (10.87m)
Width (W)	7.3' (2.24m)
Height (H)	4.5' (1.38m)
Weight	24,449 lbs. (11.09mt)

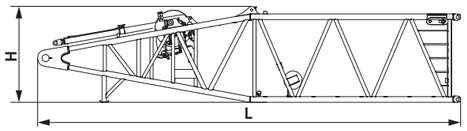

Boom base with jib luffing winch	×1
Length (L)	40.7' (12.40m)
Width (W)	9.8' (3.00m)
Height (H)	9.2' (2.79m)
Weight	28,704 lbs. (13.02mt)

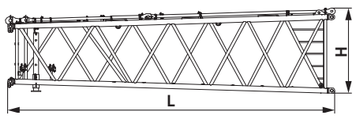

Tapered insert of boom	×1
Length (L)	35' (10.68m)
Width (W)	9.7' (2.96m)
Height (H)	9.2' (2.79m)
Weight	11,464 lbs. (5.2mt)

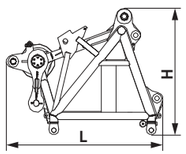

Boom tip	×1
Length (L)	7.7' (2.34m)
Width (W)	8.5' (2.59m)
Height (H)	8'6''(2.60m)
Weight	7,893 lbs. (3.58mt)

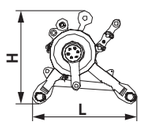

Sheave block	×3
Length (L)	4.7' (1.42m)
Width (W)	4.5' (1.36m)
Height (H)	4.2' (1.27m)
Weight	2,050 lbs. (.93mt)

In the interest of continual equipment development, SANY America Inc. reserves the right to change these specifications at any time without prior notification.

Transport Dimensions

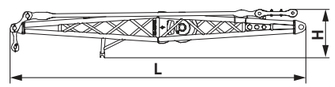

Fixed jib mast	×1
Length (L)	20.3' (6.20m)
Width (W)	8.1' (2.47m)
Height (H)	3.6' (1.10m)
Weight	5,291 lbs. (2.4mt)

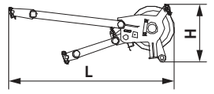

Extension jib	×1
Length (L)	7.2' (2.22m)
Width (W)	3.3' (1.00m)
Height (H)	4.7' (1.43m)
Weight	794 lbs. (.36mt)

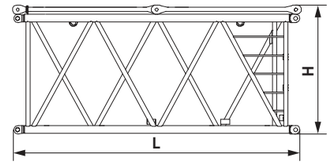

19'8" (6m) boom insert	×2
Length (L)	20.5' (6.24m)
Width (W)	9.7' (2.96m)
Height (H)	9.1' (2.78m)
Weight	5,512 lbs. (2.5mt)

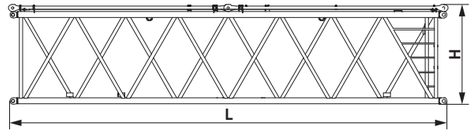

39'4" (12m) boom insert A	×1
Length (L)	40.2' (12.24m)
Width (W)	9.7' (2.96m)
Height (H)	9.1' (2.78m)
Weight	10,141 lbs. (4.6mt)

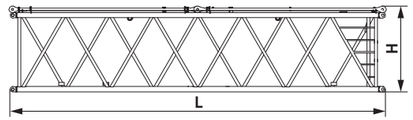

39'4" (12m) boom insert B	×3
Length (L)	40.2' (12.24m)
Width (W)	9.7' (2.96m)
Height (H)	9.1' (2.78m)
Weight	8,819 lbs. (4mt)

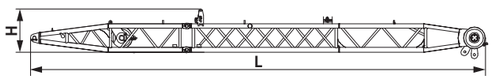

Front mast of luffing jib	×1
Length (L)	44.1' (13.44m)
Width (W)	7.2' (2.18m)
Height (H)	4.9' (1.48m)
Weight	7,275 lbs. (3.3mt)

In the interest of continual equipment development, SANY America Inc. reserves the right to change these specifications at any time without prior notification.

Transport Dimensions

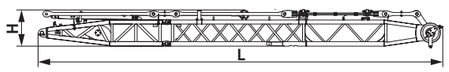

Rear mast of luffing jib	×1
Length (L)	42.5' (12.94m)
Width (W)	9.6' (2.94m)
Height (H)	4.2' (1.29m)
Weight	11,244 lbs. (5.1mt)

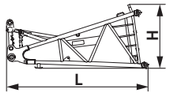

Luffing jib base	×1
Length (L)	15.6' (4.74m)
Width (W)	8.4' (2.56m)
Height (H)	7.5' (2.30m)
Weight	5,291 lbs. (2.4mt)

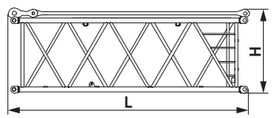

19'8"(6m) luffing jib insert I	×1
Length (L)	20.6' (6.28m)
Width (W)	8.5' (2.56m)
Height (H)	7.5' (2.28m)
Weight	4,409 lbs. (2.0mt)

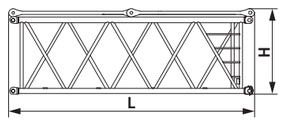

19'8"(6m) luffing jib insert II	×1
Length (L)	20.7' (6.30m)
Width (W)	8.5' (2.60m)
Height (H)	7'5" (2.30m)
Weight	3,748 lbs. (1.7mt)

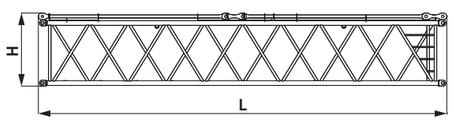

39'4"(12m) luffing jib insert	×1
Length (L)	40' (12.24m)
Width (W)	8.4' (2.56m)
Height (H)	7.2' (2.19m)
Weight	6,173 lbs. (2.8mt)

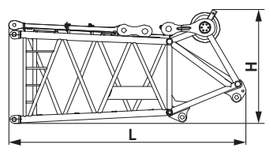

Luffing jib top	×4
Length (L)	16.6' (5.05m)
Width (W)	8.4' (2.56m)
Height (H)	8' (2.43m)
Weight	6,614 lbs. (3mt)

In the interest of continual equipment development, SANY America Inc. reserves the right to change these specifications at any time without prior notification.

Transport Dimensions

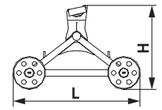

Trolley	×1
Length (L)	6.6' (2.02m)
Width (W)	4' (1.23m)
Height (H)	4.4' (1.33m)
Weight	1,323 lbs. (.6mt)

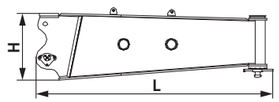

Side outrigger	×2
Length (L)	11.9' (3.63m)
Width (W)	2.6'' (0.78m)
Height (H)	3.4' (1.05m)
Weight	4,189 lbs. (1.9mt)

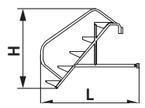

Ladder	×2
Length (L)	4.1' (1.25m)
Width (W)	1.8' (0.56m)
Height (H)	4' (1.22m)
Weight	110 lbs. (.05mt)

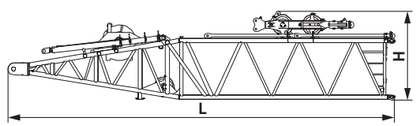

Superlift mast base	×1
Length (L)	40.3' (12.28m)
Width (W)	9.8' (3.00m)
Height (H)	9.4' (2.86m)
Weight	36,817 lbs.(16.7mt)

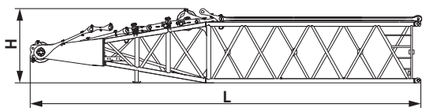

Superlift mast top	×1
Length (L)	40.7' (12.42m)
Width (W)	9.5' (2.90m)
Height (H)	7.9' (2.40m)
Weight	18,739 lbs. (8.5mt)

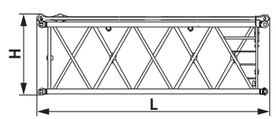

Superlift mast insert	×1
Length (L)	20.3' (6.18m)
Width (W)	9.5' (2.90m)
Height (H)	7.1' (2.15m)
Weight	5,512 lbs. (2.5mt)

In the interest of continual equipment development, SANY America Inc. reserves the right to change these specifications at any time without prior notification.

Transport Dimensions

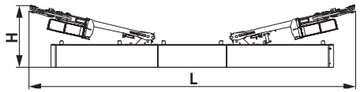

Superlift counterweight tray	×1
Length (L)	32.6' (9.95m)
Width (W)	8.9' (2.70m)
Height (H)	7.2' (2.20m)
Weight	19,842 lbs. (9mt)

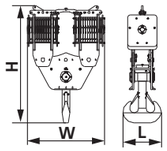

440UST (400t) hook of dual sheave blocks	×1
Length (L)	3.3' (1.02m)
Width (W)	8.8' (2.69m)
Height (H)	13.4' (4.07m)
Weight	23,149 lbs. (10.5mt)

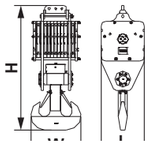

286UST (260t) hook	×1
Length (L)	3.4' (1.02m)
Width (W)	3.7' (1.13m)
Height (H)	9.6' (2.93m)
Weight	10,582 lbs. (4.8mt)

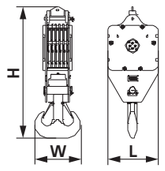

176UST (160t) hook	×1
Length (L)	2' (0.60m)
Width (W)	3.3' (1.02m)
Height (H)	8.7' (2.65m)
Weight	6,834 lbs. (3.1mt)

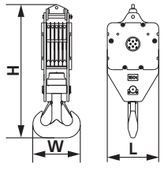

55UST (50t) hook	×1
Length (L)	1.11' (0.60m)
Width (W)	2.5' (0.77m)
Height (H)	6.9' (2.11m)
Weight	3,748 lbs. (1.7mt)

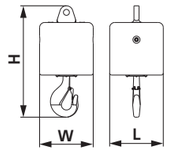

18UST (16t) hook	×1
Length (L)	1.7' (0.60m)
Width (W)	1.7' (0.60m)
Height (H)	3.6' (1.10m)
Weight	1,984 lbs. (.9mt)

In the interest of continual equipment development, SANY America Inc. reserves the right to change these specifications at any time without prior notification.

Transport Dimensions

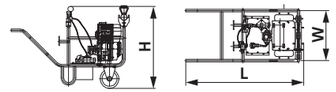

Note:
1. The transport dimensions of each part in the table are schematic, not proportional to the real parts. The dimensions are designed value without package considered.
2. Weight is designed value that the actual manufactured part may deviate a little.
3. The dimensions and weight of each part may change due to product upgrading. The final values are subject to the new product.

Portable hydraulic power pack system	×1
Length (L)	1.8' (0.54m)
Width (W)	.8' (0.23m)
Height (H)	1.3' (0.38m)
Weight	419 lbs. (0.19mt)

In the interest of continual equipment development, SANY America Inc. reserves the right to change these specifications at any time without prior notification.

Self-Assembly Plan

Basic machine self-assembly

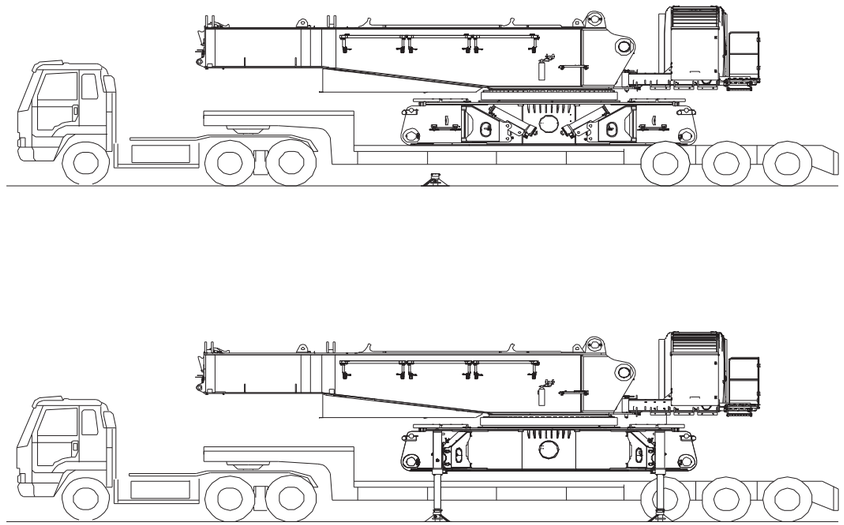

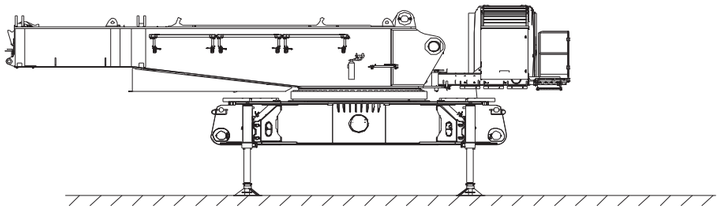

Note: The schematics above are reference for self-assembly method only.

In the interest of continual equipment development, SANY America Inc. reserves the right to change these specifications at any time without prior notification.

Self-Assembly Plan

Crawler frame self-assembly

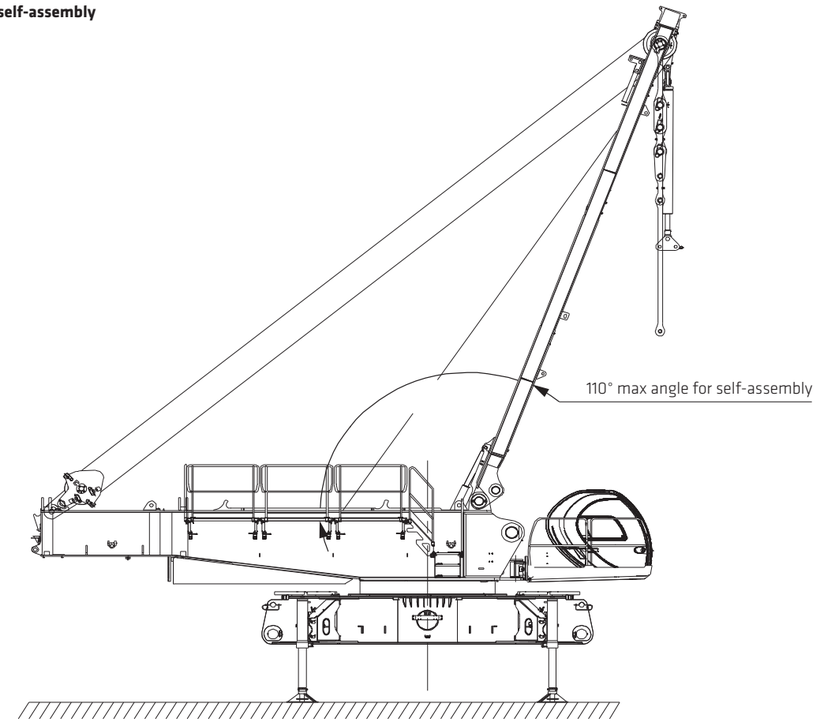

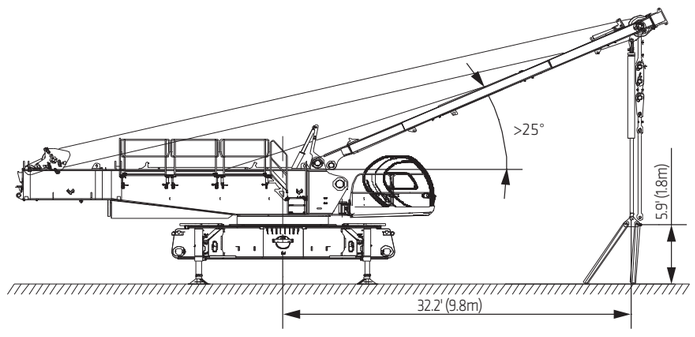

Note: The schematics above are reference for self-assembly method only.

In the interest of continual equipment development, SANY America Inc. reserves the right to change these specifications at any time without prior notification.

Self-Assembly Plan

Crawler frame self-assembly

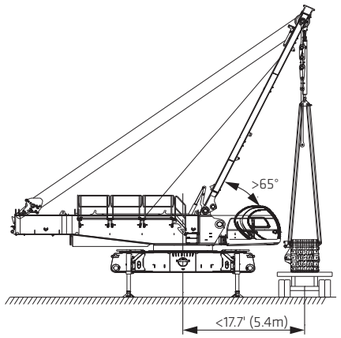

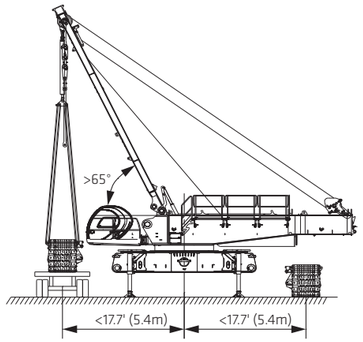

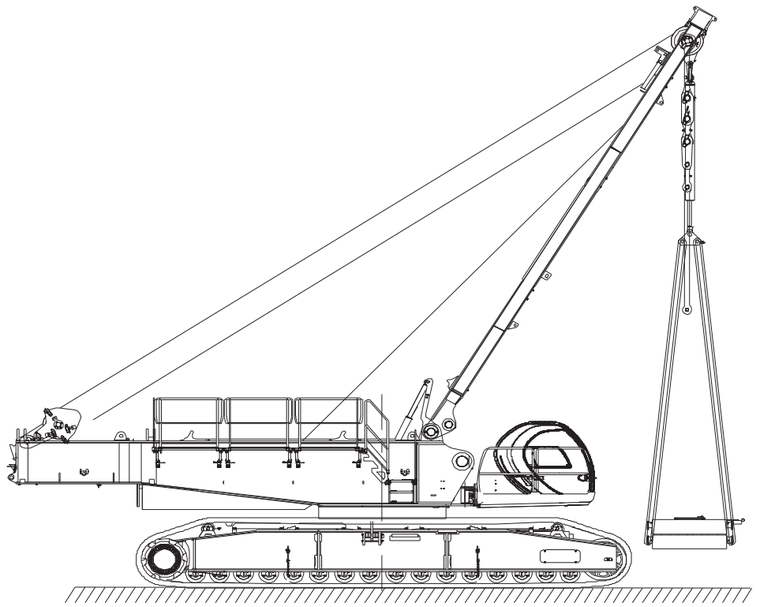

Note: The schematics above are reference for self-assembly method only.

In the interest of continual equipment development, SANY America Inc. reserves the right to change these specifications at any time without prior notification.

Self-Assembly Plan

Boom assembly

Superlift mast assembly

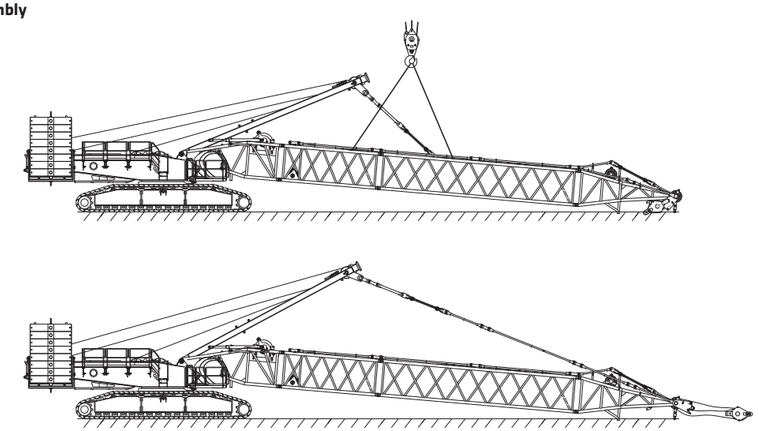

Note: The schematics above are reference for self-assembly method only.

In the interest of continual equipment development, SANY America Inc. reserves the right to change these specifications at any time without prior notification.

Self-Assembly Plan

Luffing jib assembly

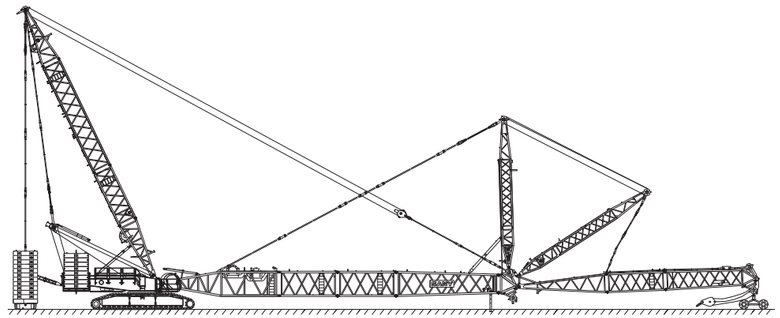

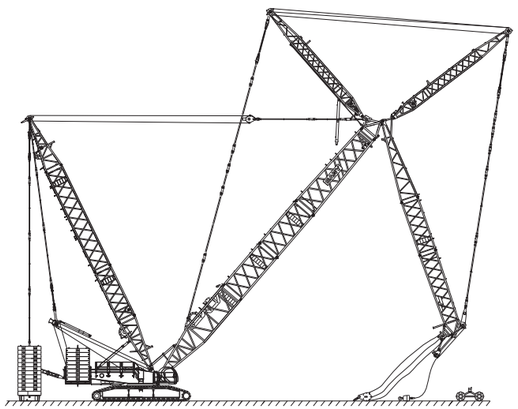

Note: The schematics above are reference for self-assembly method only.

In the interest of continual equipment development, SANY America Inc. reserves the right to change these specifications at any time without prior notification.

Self-Assembly Plan

Fixed jib assembly

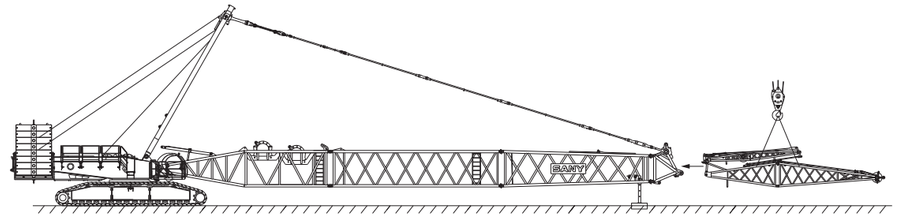

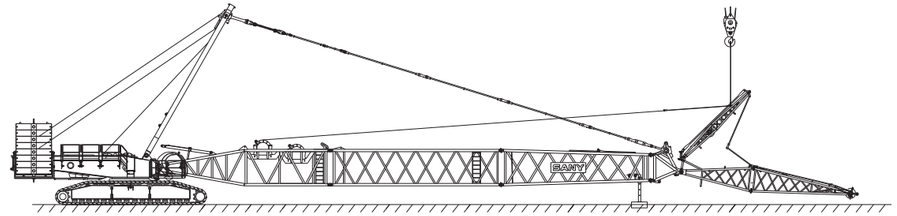

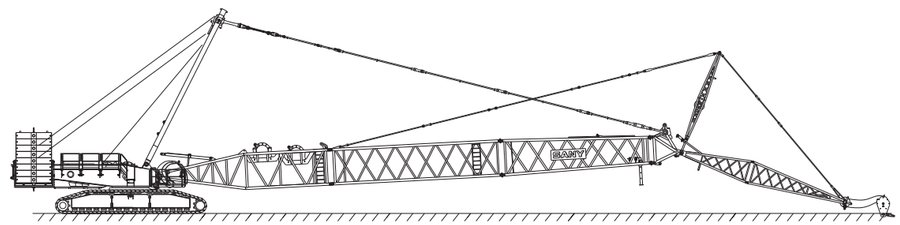

Note: The schematics above are reference for self-assembly method only.

In the interest of continual equipment development, SANY America Inc. reserves the right to change these specifications at any time without prior notification.

C

SCA4000A
SANY CRAWLER CRANE
440UST(400TONS) LIFTING CAPACITY

MADE FOR AMERICA

Configurations

- Page 27 Configurations
- Page 30 H Configuration
- Page 33 HDB Configuration
- Page 36 HJ Configuration
- Page 39 HJDB Configuration
- Page 42 HJFJ Configuration
- Page 47 FJh Configuration
- Page 50 FJhDB Configuration
- Page 54 LJ Configuration
- Page 59 LJDB Configuration

> 29

Boom Combination

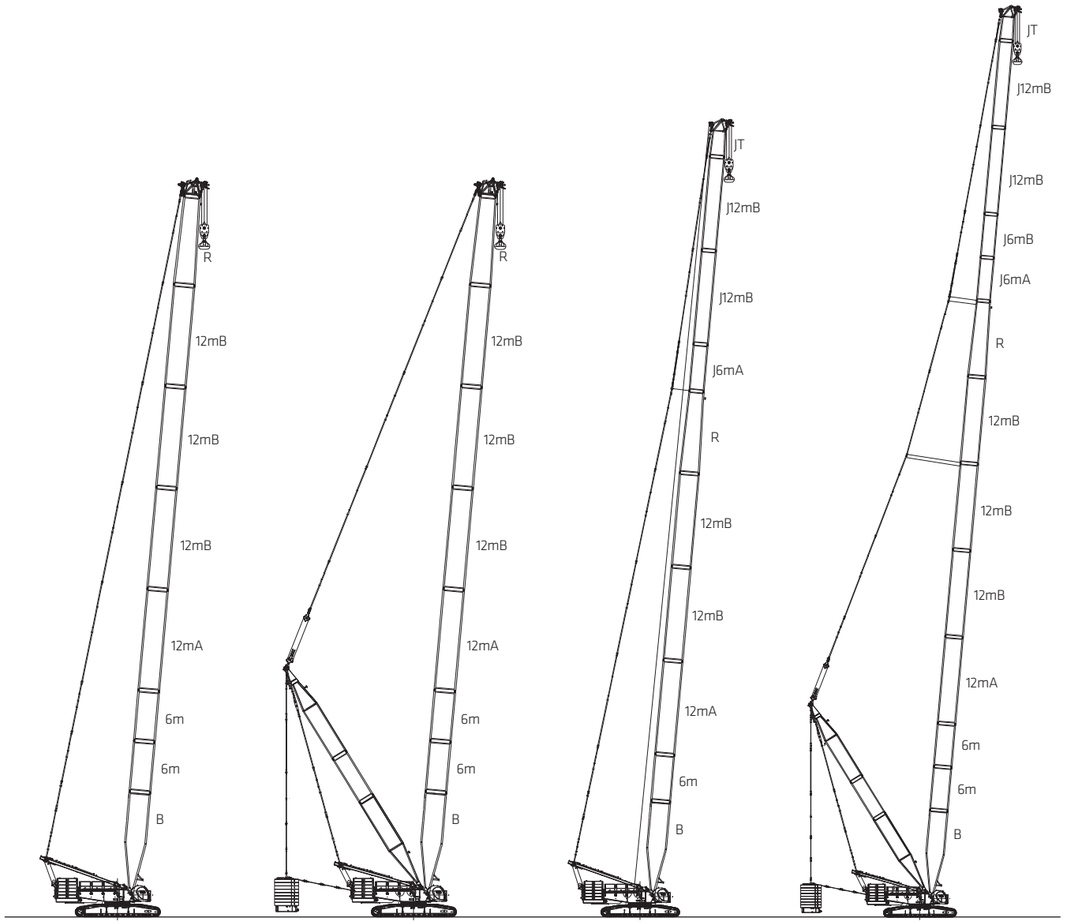

H Configuration **HDB Configuration** **HJ Configuration** **HJDB Configuration**

Configuration	Boom Combination	Boom Length
H	Boom	78.7ft~275.6ft(24m~84m)
HDB	Boom+ superlift mast+ superlift counterweight	118.1ft~275.6ft(36m~84m)
HJ	Mixed boom	147.6ft~324.8ft(45m~99m)
HJDB	Mixed boom+ superlift mast+ superlift counterweight	226.4ft~403.5ft(69m~123m)

Note: The schematics above are reference for loading only.

Boom Combination

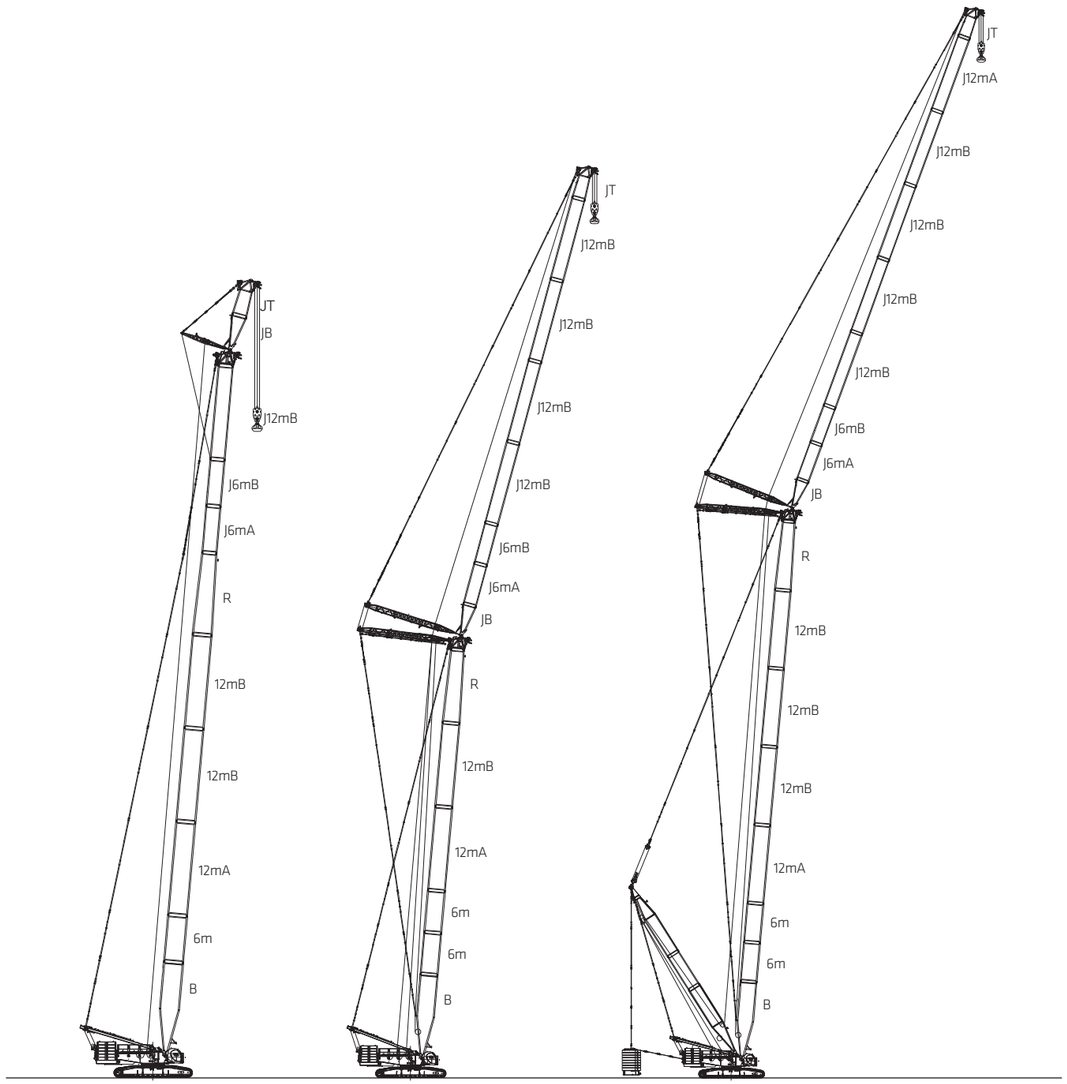

HJFJ Configuration **LJ Configuration** **LJDB Configuration**

Configuration	Boom Combination	Boom Length
HJFJ	Mixed boom+ fixed jib	(236.2ft~295.3ft)+29.5ft (72m~90m)+9m
LJ	Boom+luffing jib	(118.1ft~196.9ft)+(68.9ft~226.4ft) (36m~60m)+(21m~69m)
LJDB	Boom + luffing jib +superlift mast+ superlift counterweight	(118.1ft~275.6ft)+(68.9ft~265.7ft) (36m~84m)+(21m~81m)

Note: The schematics above are reference for loading only.

In the interest of continual equipment development, SANY America Inc. reserves the right to change these specifications at any time without prior notification.

Boom Combination

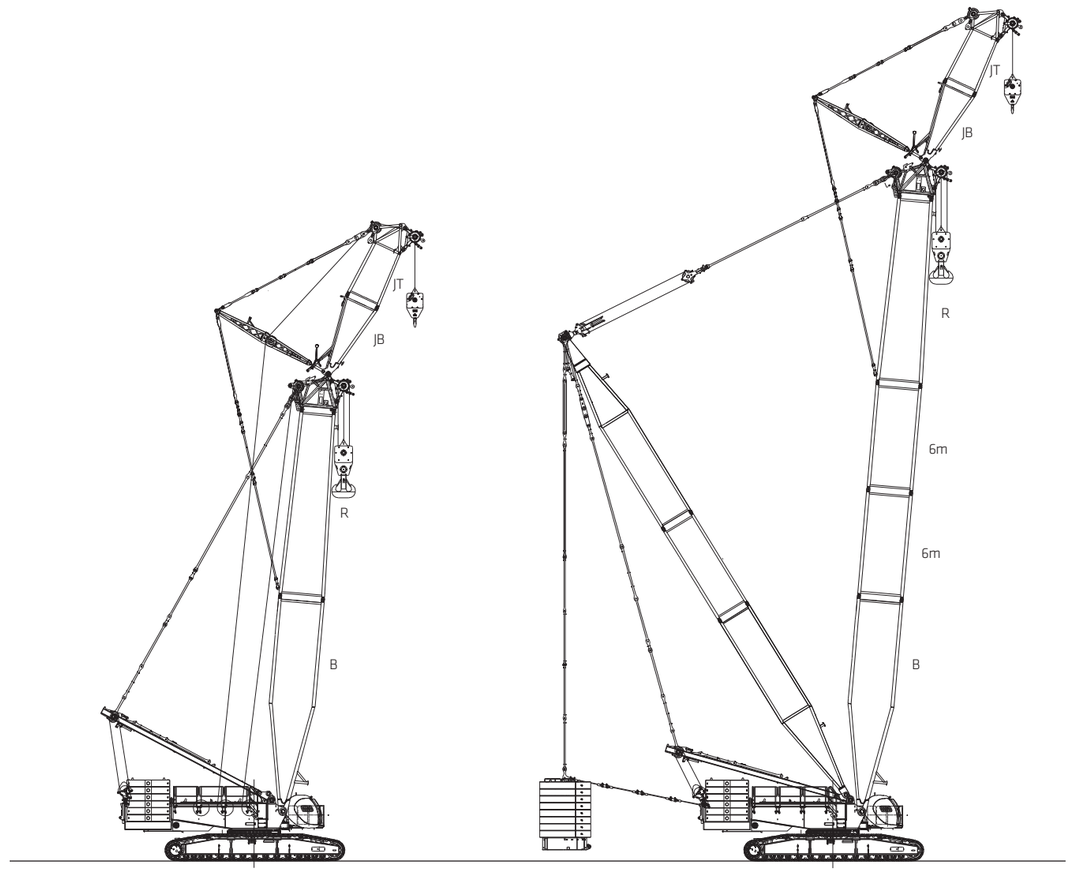

FJh Configuration **FJhDB Configuration**

Configuration	Boom Combination	Boom Length
FJh	Boom+short heavy fixed jib	78.7ft+29.5ft(24m+9m)
FJhDB	Boom+short heavy fixed jib + superlift mast+ superlift counterweight	118.1ft+29.5ft(36m+9m)

Note: The schematics above are reference for loading only.

In the interest of continual equipment development, SANY America Inc. reserves the right to change these specifications at any time without prior notification.

Boom Combination in H

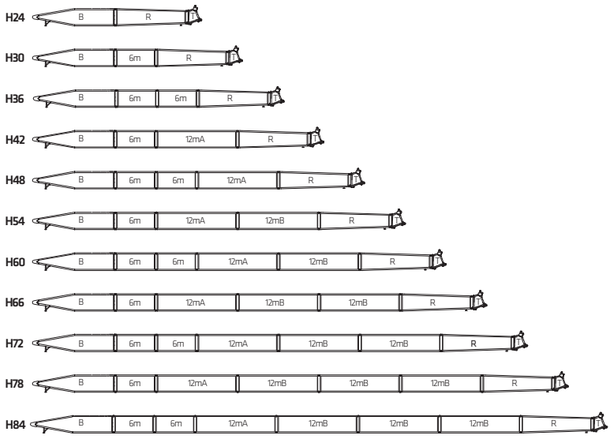

B	Boom base
6m	Boom insert
12mA	Boom insert
12mB	Boom insert
R	Tapered insert
	Boom tip

Note: The 78.7ft(24m) basic boom consists of 39.4ft(12m) boom base, 34.4ft(10.5m) tapered insert and 4.9ft(1.5m) boom tip.

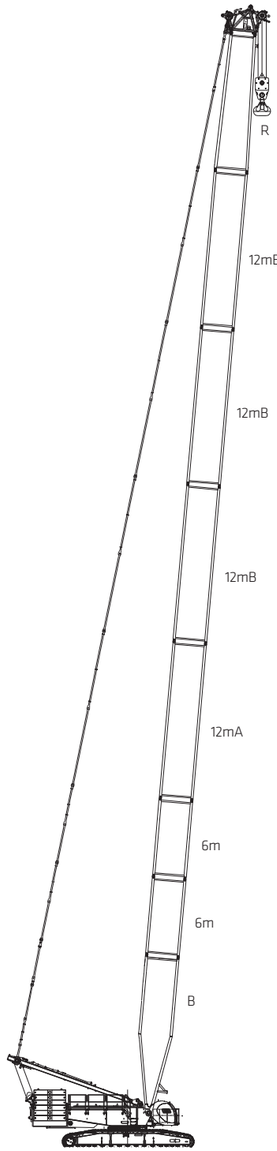

H Configuration
78.7ft~275.6ft (24m~84m)

In the interest of continual equipment development, SANY America Inc. reserves the right to change these specifications at any time without prior notification.

Working Radius in H

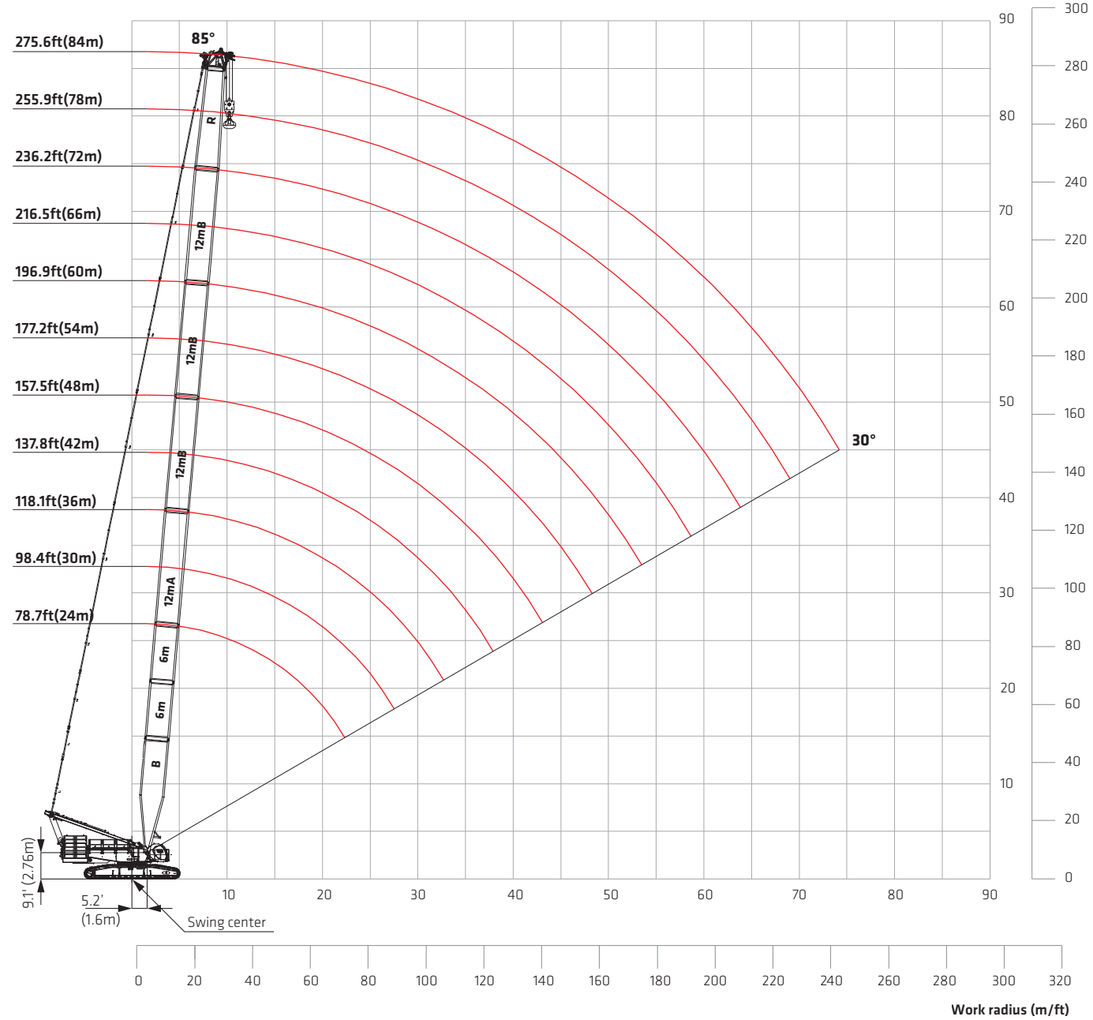

In the interest of continual equipment development, SANY America Inc. reserves the right to change these specifications at any time without prior notification.

Unit:klb

Load Chart of H

Note:
1.The rated load in the load chart is calculated complying with ASME B30.5;
2.The working radius is the horizontal distance from the load center to the center of turntable bearing;
3.The actual lifting capacity must subtract the weight of hooks and other riggings from the rated capacity in the load chart;
4.The load value is calculated when the object is hung freely,without considering the influence of wind on the load, ground conditions and slope, operation speed and the influence of any other negative factors over safe operation. Therefore, the operator bears the responsibility of making a judgment and decreasing the load and lowering speed;
5.All ratings are calculated when the machine is on firm and level ground with less than 1% gradient.

H configuration load chart

Boom length 78.7~275.6ft, Rear counterweight 330.7klb, Carbody counterweight 88.2 klb

Radius (ft)	78.7	98.4	118.1	137.8	157.5	177.2	196.9	216.5	236.2	255.9	275.6	Radius (ft)
19.7	881.8	881.8										19.7
25.0	774.9	751.3	699.1	653.6								25.0
30.0	627.9	593.2	559.2	529.0	501.0	475.5	451.8	430.1				30.0
35.0	517.2	490.8	465.8	443.7	422.4	404.1	385.7	368.8	353.4	338.7		35.0
40.0	434.2	416.3	397.0	379.8	364.6	349.6	334.6	321.6	308.6	297.8	284.7	40.0
45.0	363.6	360.8	346.6	332.8	319.3	307.6	296.0	284.6	273.3	264.2	252.8	45.0
50.0	312.2	312.2	307.2	295.3	283.5	273.8	264.2	254.5	244.8	236.0	228.0	50.0
55.0	271.9	271.9	271.1	264.3	254.1	245.3	237.4	229.2	220.9	212.9	206.4	55.0
60.0	239.8	239.8	237.8	237.7	229.8	221.3	214.8	207.9	200.6	194.1	187.1	60.0
65.0	213.9	214.1	213.1	212.5	209.3	202.7	195.9	189.6	183.1	177.1	170.8	65.0
70.0	192.9	193.3	192.4	191.7	189.8	186.1	179.7	174.1	168.1	162.8	156.9	70.0
75.0		175.3	174.5	173.7	172.3	170.6	165.4	160.4	154.8	150.0	144.5	75.0
80.0		159.7	159.0	158.2	156.8	156.2	152.7	148.2	143.0	138.5	133.5	80.0
85.0		146.3	145.6	144.9	143.4	142.7	141.1	137.3	132.4	128.2	123.6	85.0
90.0		134.9	134.4	133.7	132.2	131.5	130.0	128.0	123.3	119.4	114.8	90.0
95.0			124.2	123.6	122.1	121.5	119.8	118.7	114.9	111.3	106.8	95.0
100.0			115.1	114.5	113.1	112.4	110.7	109.8	107.2	103.8	99.5	100.0
105.0				106.4	104.9	104.2	102.7	101.6	100.0	96.9	93.0	105.0
110.0				99.4	97.8	97.2	95.6	94.5	92.8	90.9	87.1	110.0
115.0				92.8	91.3	90.8	89.1	88.0	86.3	85.0	81.6	115.0
120.0				86.7	85.4	84.9	83.2	82.1	80.4	79.2	76.4	120.0
130.0					75.0	74.6	72.8	71.9	70.2	68.8	67.0	130.0
140.0						66.0	64.4	63.4	61.6	60.3	58.5	140.0
150.0						58.5	56.9	55.8	54.0	52.8	51.0	150.0
160.0							50.3	49.2	47.5	46.4	44.4	160.0
170.0							44.4	43.5	41.7	40.6	38.7	170.0
180.0								38.6	36.8	35.7	33.7	180.0
190.0									32.4	31.3	29.3	190.0
200.0									28.3	27.2	25.2	200.0
210.0										23.5	21.5	210.0
220.0										20.3	18.4	220.0
230.0											15.4	230.0
236.2											13.6	236.2

In the interest of continual equipment development, SANY America Inc. reserves the right to change these specifications at any time without prior notification.

Boom Combination in HDB

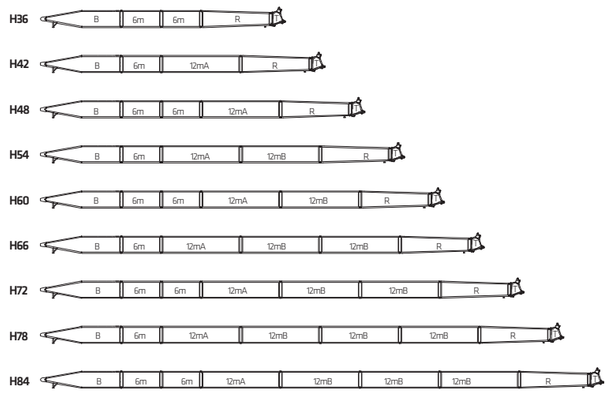

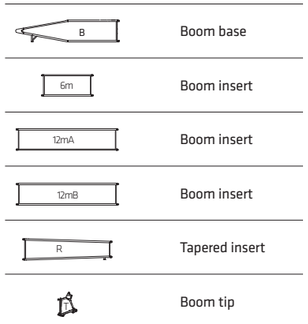

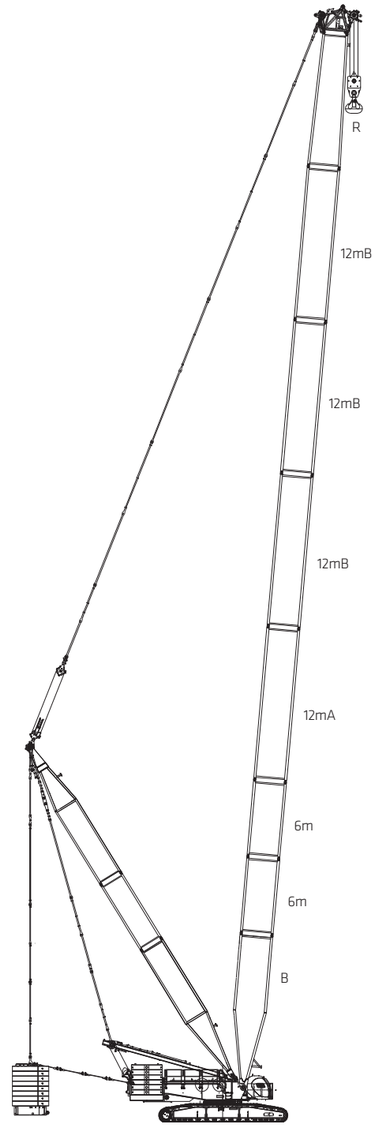

HDB Configuration
118.1ft~275.6ft (36m~84m)

In the interest of continual equipment development, SANY America Inc. reserves the right to change these specifications at any time without prior notification.

Working Radius in HDB

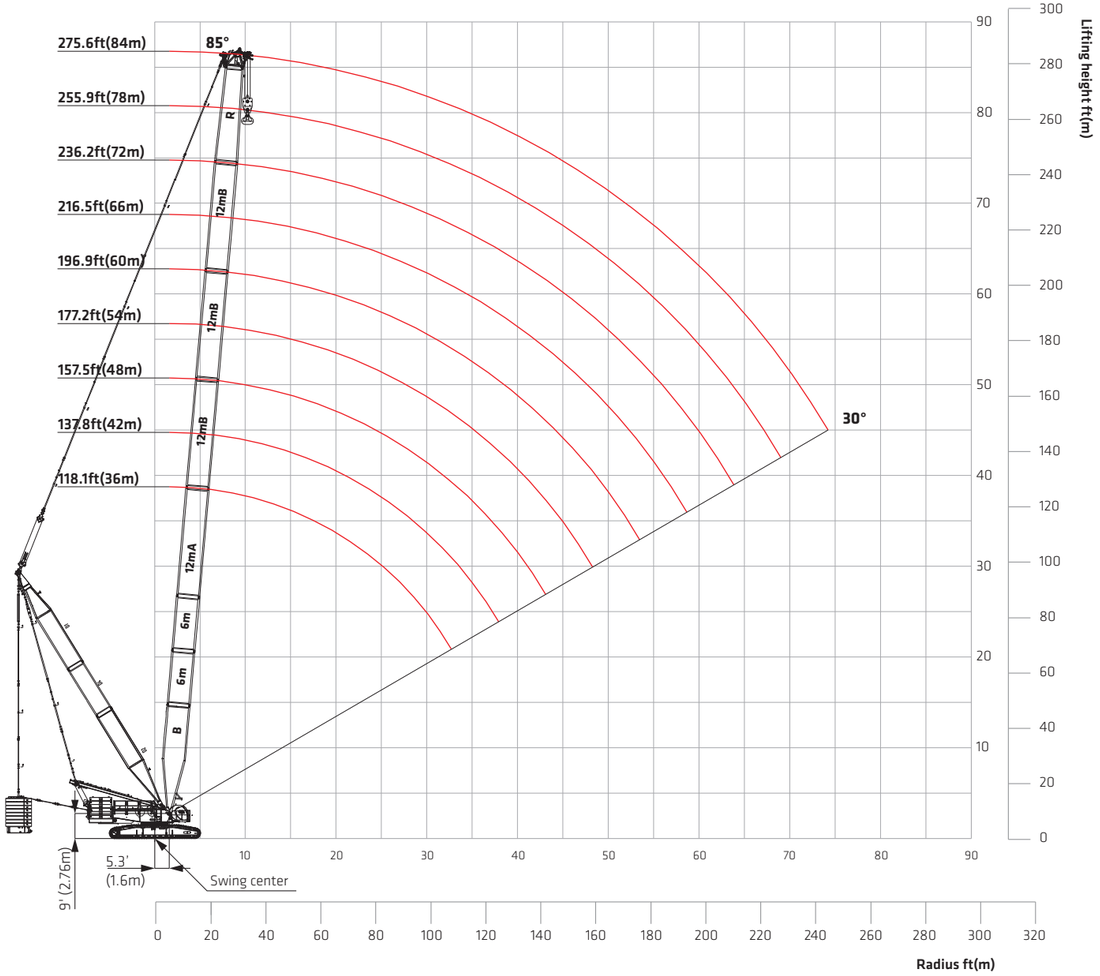

In the interest of continual equipment development, SANY America Inc. reserves the right to change these specifications at any time without prior notification.

Unit:klb

Load Chart of HDB

Note:
1.The rated load in the load chart is calculated complying with ASME B30.5;
2.The working radius is the horizontal distance from the load center to the center of turntable bearing;
3.The actual lifting capacity must subtract the weight of hooks and other riggings from the rated capacity in the load chart;
4.The load value is calculated when the object is hung freely,without considering the influence of wind on the load, ground conditions and slope, operation speed and the influence of any other negative factors over safe operation. Therefore, the operator bears the responsibility of making a judgment and decreasing the load and lowering speed;
5.All ratings are calculated when the machine is on firm and level ground with less than 1% gradient;
6.See the Operation Manual for the complete load charts of HDB Configurations.

HDB configuration load chart

Boom length 118.1~275.6ft, Superlift radius 49.2ft, Superlift counterweight 463Klb,
Rear counterweight 330.7Klb, Carbody counterweight 88.2Klb

Radius(ft)	118.1	137.8	157.5	177.2	196.9	216.5	236.2	255.9	275.6	Radius(ft)
	881.8*	881.8*								23.0
25.0	881.8*	881.8*								25.0
30.0	881.8*	881.8*	881.8*	769.4*	725.3*	615.0*				30.0
35.0	881.8	881.8	881.8	769.4*	725.3*	615.0*	541.6*	447.5*		35.0
40.0	878.8	878.6	878.6	769.4	725.3	615.0*	542.5*	447.7*	388.0*	40.0
45.0	855.3	853.4	853.4	769.4	725.3	615.0*	544.2*	449.4*	388.0*	45.0
50.0	778.5	777.7	777.7	747.5	725.3	631.4	543.1*	449.7*	389.3*	50.0
55.0	700.4	699.6	699.6	700.4	695.0	642.3	542.3	448.9*	389.3*	55.0
60.0	635.7	633.5	633.5	635.1	635.1	633.2	542.3	447.5	388.0*	60.0
65.0	582.0	579.8	579.8	578.0	578.0	577.8	542.3	447.5	388.0*	65.0
70.0	537.1	534.9	534.9	534.1	531.2	531.2	520.2	447.5	386.5	70.0
75.0	497.2	495.0	495.0	495.9	492.5	489.6	488.4	446.5	386.7	75.0
80.0	461.9	459.7	459.7	461.9	459.7	454.4	452.7	440.2	387.5	80.0
85.0	431.7	429.5	429.5	431.7	429.5	429.2	420.8	420.0	385.9	85.0
90.0	404.6	404.0	404.0	404.6	404.0	402.4	399.9	393.6	382.6	90.0
95.0	380.9	379.8	379.8	379.8	379.8	378.7	377.6	373.0	367.7	95.0
100.0	359.6	357.4	357.4	357.9	357.4	357.4	355.7	355.2	348.5	100.0
105.0		337.2	337.2	339.4	337.2	337.2	337.2	335.0	335.0	105.0
110.0		320.4	320.4	320.9	320.4	320.4	318.7	318.2	316.5	110.0
115.0		304.8	304.8	304.8	304.8	304.8	302.6	302.6	300.4	115.0
120.0		290.3	290.3	290.3	289.7	289.7	288.1	287.5	285.9	120.0
130.0			263.4	263.4	263.0	263.0	261.2	260.8	259.0	130.0
140.0				241.0	241.0	241.0	238.7	238.7	238.0	140.0
150.0				222.1	221.9	221.8	220.0	219.8	219.1	150.0
160.0					205.3	205.1	204.0	203.4	201.8	160.0
170.0					190.0	190.0	188.9	188.3	186.7	170.0
180.0						176.8	175.7	175.0	173.6	180.0
190.0							163.7	163.1	161.8	190.0
200.0							152.9	152.3	150.9	200.0
210.0								142.3	141.0	210.0
220.0								133.6	132.3	220.0
230.0									124.1	230.0
236.2									119.2	236.2

Note:For values marked with "*", the superlift counterweight shall not leave the ground.

In the interest of continual equipment development, SANY America Inc. reserves the right to change these specifications at any time without prior notification.

Boom Combination of HJ

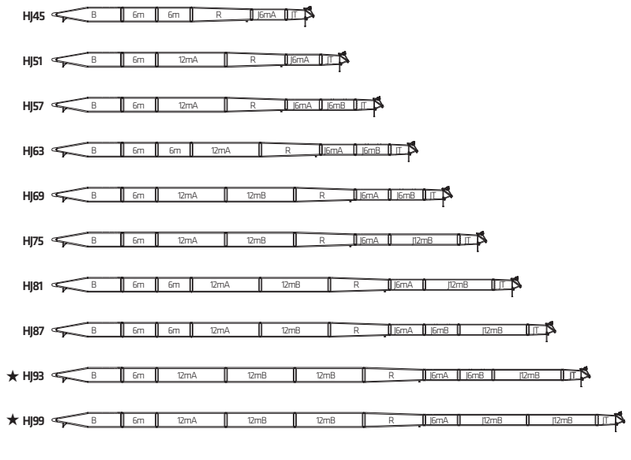

B	Boom base
6m	Boom insert
12mA	Boom insert
12mB	Boom insert
R	Tapered insert
	Boom tip
	Jib base
JT	Jib top
J6mA	Jib insert
J6mB	Jib insert
J12mB	Jib insert

Note:
1.The 39.4ft(12m) boom base, 34.4ft(10.5m) tapered insert, 19.8ft(6m) tapered jib insert, 14.8ft(4.5m) jib top are must.
2.For combinations marked with "★", the mid-point suspension cable must be used, otherwise, the boom may break.

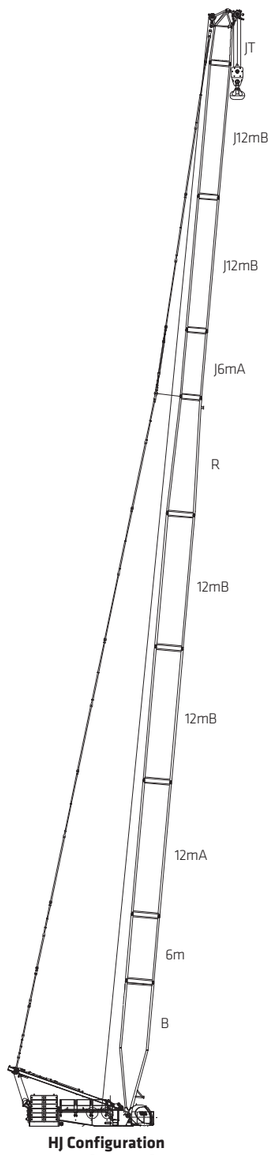

HJ Configuration
147.6ft~324.8ft
(45m~99m)

In the interest of continual equipment development, SANY America Inc. reserves the right to change these specifications at any time without prior notification.

Working Radius in HJ

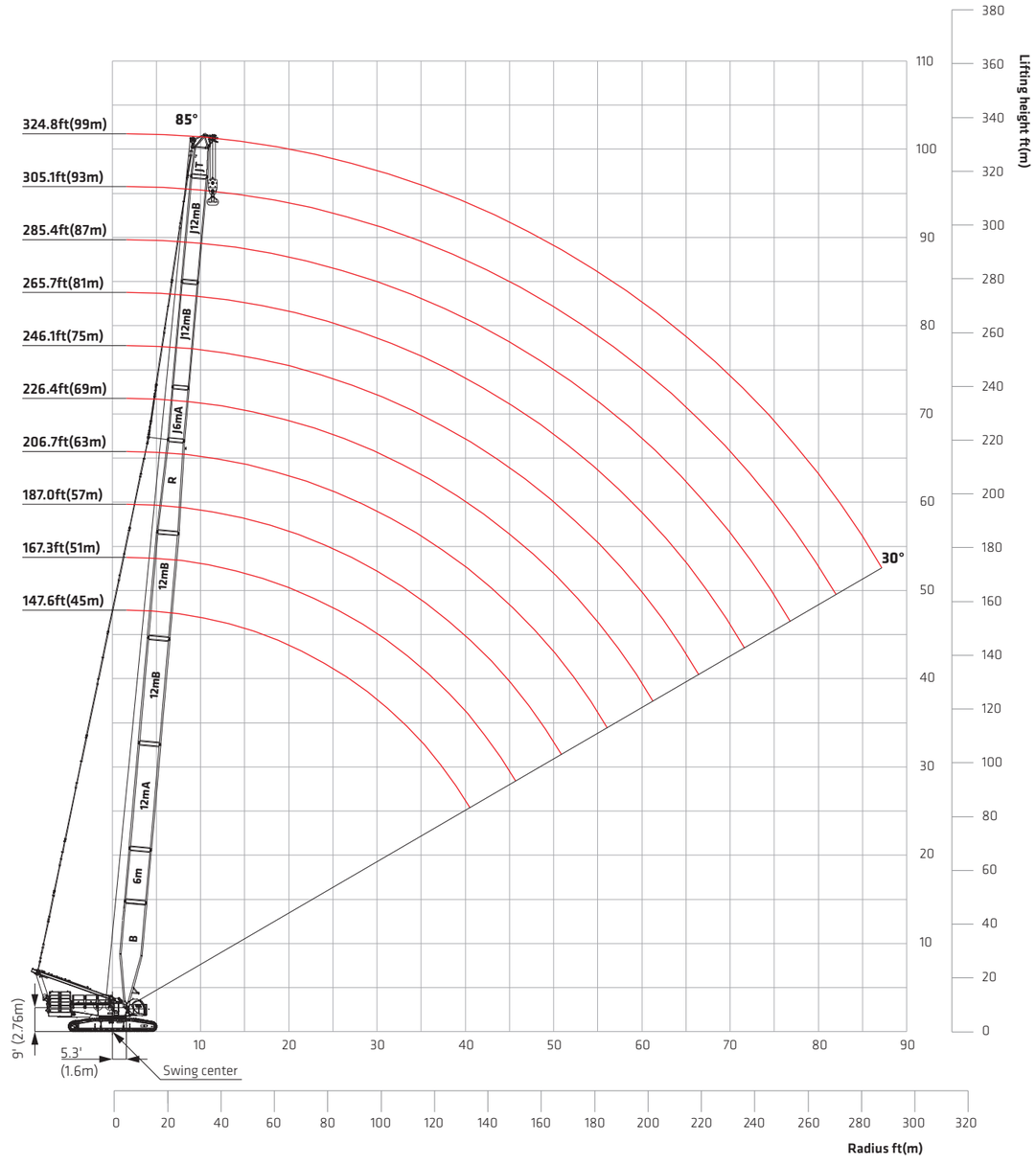

In the interest of continual equipment development, SANY America Inc. reserves the right to change these specifications at any time without prior notification.

Unit:klb

Load Chart of HJ

Note:
1. The rated load in the load chart is calculated complying with ASME B30.5;
2.The working radius is the horizontal distance from the load center to the center of turntable bearing;
3.The actual lifting capacity must subtract the weight of hooks and other riggings from the rated capacity in the load chart;
4.The load value is calculated when the object is hung freely,without considering the influence of wind on the load, ground conditions and slope, operation speed and the influence of any other negative factors over safe operation. Therefore, the operator bears the responsibility of making a judgment and decreasing the load and lowering speed;
5.All ratings are calculated when the machine is on firm and level ground with less than 1% gradient.

HJ configuration load chart

Boom length 147.6-324.8 ft,Rear counterweight 330.7Klb, Carbody counterweight 88.2Klb

Radius(ft)	147.6	167.3	187.0	206.7	226.4	246.1	265.7	285.4	305.1	324.8	Radius(ft)
23.0	432.1										23.0
25.0	433.4										25.0
30.0	434.9	432.4	423.6	415.4	409.0						30.0
35.0	428.4	413.6	400.4	382.8	368.1	323.3	333.6				35.0
40.0	377.8	362.6	349.6	334.6	321.8	311.0	300.0	263.2	266.4	226.4	40.0
45.0	332.5	318.9	307.6	296.0	286.5	277.4	266.4	253.2	246.2	221.4	45.0
50.0	295.3	284.8	275.2	265.5	256.7	249.2	239.6	232.1	225.0	211.9	50.0
55.0	264.3	256.3	248.3	239.5	231.8	225.7	217.5	211.1	204.9	197.7	55.0
60.0	238.4	232.1	225.6	217.0	211.1	205.9	199.0	193.1	186.9	180.4	60.0
65.0	216.9	212.3	206.3	199.0	193.1	188.8	182.3	177.2	171.6	165.6	65.0
70.0	196.6	194.4	189.9	183.4	177.9	174.2	168.2	163.4	158.4	152.9	70.0
75.0	178.7	177.5	175.2	169.5	164.5	161.1	155.6	151.2	146.5	141.4	75.0
80.0	163.3	162.0	161.5	157.0	152.4	149.4	144.2	140.4	135.8	131.0	80.0
85.0	150.0	148.7	148.2	146.1	141.7	139.0	134.2	130.6	126.4	121.8	85.0
90.0	138.6	137.5	136.9	135.2	132.5	130.0	125.5	122.0	118.1	113.6	90.0
95.0	128.5	127.4	126.8	125.1	123.6	121.9	117.5	114.1	110.5	106.2	95.0
100.0	119.5	118.4	117.8	116.0	114.9	114.3	110.0	107.0	103.5	99.4	100.0
105.0	111.5	110.4	109.7	108.0	106.9	107.1	103.3	100.5	96.9	93.2	105.0
110.0	104.4	103.3	102.7	100.9	99.8	100.0	97.5	94.6	91.2	87.5	110.0
115.0	98.0	96.9	96.2	94.4	93.3	93.5	91.6	89.2	86.0	82.2	115.0
120.0	92.0	90.9	90.2	88.5	87.4	87.6	85.8	84.2	81.1	77.4	120.0
130.0	81.6	80.5	79.9	78.1	77.0	77.2	75.4	74.4	72.2	68.8	130.0
140.0		72.0	71.4	69.7	68.6	68.8	66.9	65.9	64.4	61.5	140.0
150.0			64.0	62.2	61.1	61.3	59.3	58.5	57.1	54.8	150.0
160.0				55.6	54.5	54.7	52.7	51.9	50.5	48.6	160.0
170.0				49.9	48.8	49.0	47.0	46.2	44.8	42.8	170.0
180.0				44.8	43.9	44.1	42.1	41.2	39.9	37.9	180.0
190.0					39.4	39.6	37.8	36.8	35.5	33.5	190.0
200.0						35.6	33.8	32.8	31.4	29.4	200.0
210.0							30.1	29.3	27.7	25.7	210.0
220.0							27.0	26.1	24.5	22.5	220.0
230.0							24.0	23.1	21.6	19.1	230.0
240.0								20.3	18.8	14.8	240.0
250.0									16.3	9.1	250.0
260.0									14.2	4.2	260.0
262.4									13.6	3.0	262.4

In the interest of continual equipment development, SANY America Inc. reserves the right to change these specifications at any time without prior notification.

Boom Combination in HJDB

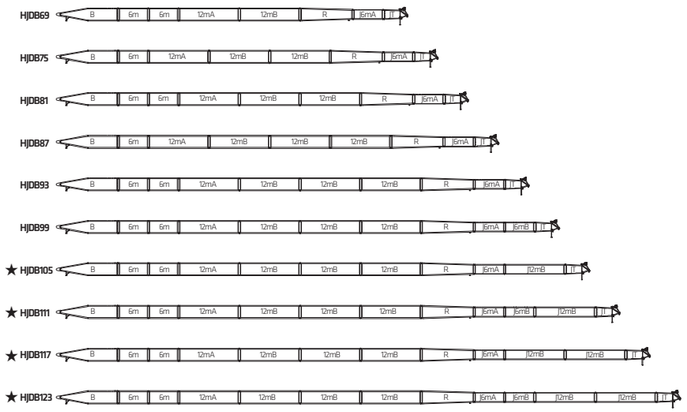

B	Boom base
6m	Boom insert
12mA	Boom insert
12mB	Boom insert
R	Tapered insert
JT	Jib top
J6mA	Jib insert
J6mB	Jib insert
J12mB	Jib insert

Note:
1.The 39.4ft(12m) boom base, 34.4ft(10.5m) tapered insert, 19.7ft(6m) luffing jib insert A and 14.8ft(4.5m) jib top are must.
2.For combinations marked with "★", the mid-suspension cable must be used, otherwise, the boom system may break.

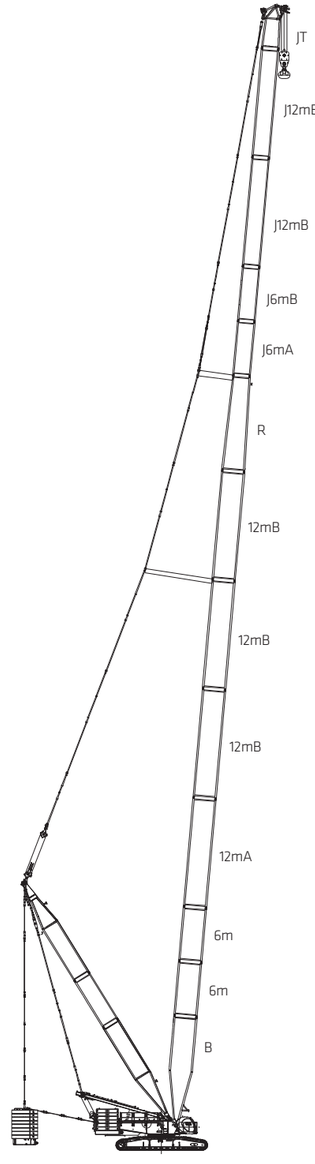

HJDB Configuration
226.4ft~403.5ft
(69m~123m)

In the interest of continual equipment development, SANY America Inc. reserves the right to change these specifications at any time without prior notification.

Working Radius of HJDB

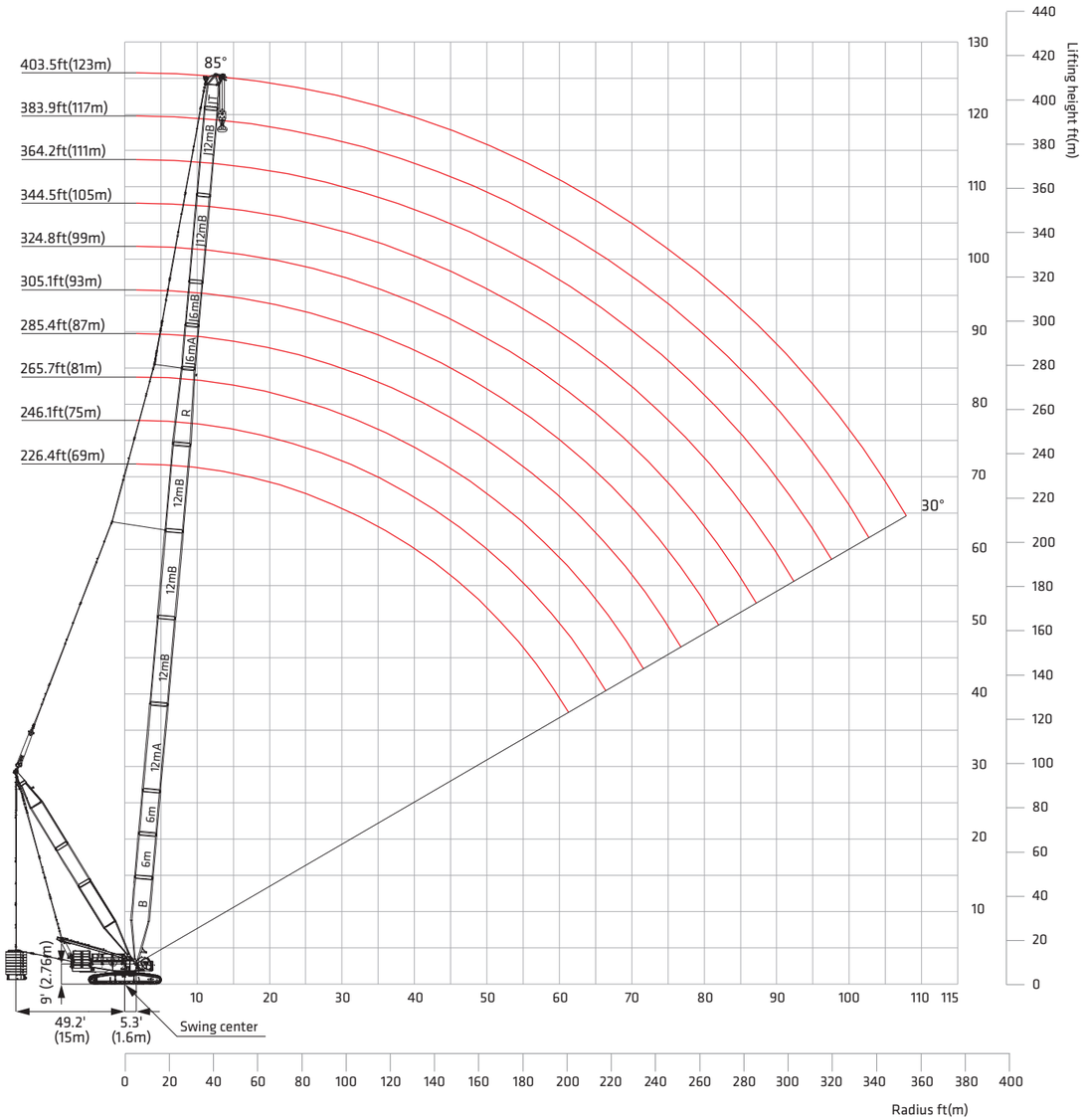

In the interest of continual equipment development, SANY America Inc. reserves the right to change these specifications at any time without prior notification.

Load Chart of HJDB

Unit:klb

Note:
1.The rated load in the load chart is calculated complying with ASME B30.5;
2.The working radius is the horizontal distance from the load center to the center of turntable bearing;
3.The actual lifting capacity must subtract the weight of hooks and other riggings from the rated capacity in the load chart;
4.The load value is calculated when the object is hung freely,without considering the influence of wind on the load, ground conditions and slope, operation speed and the influence of any other negative factors over safe operation. Therefore, the operator bears the responsibility of making a judgment and decreasing the load and lowering speed;
5.All ratings are calculated when the machine is on firm and level ground with less than 1% gradient;
6.See the Operation Manual for the complete load charts of HJDB Configuration.

HJDB configuration load chart

Boom length 226.4-403.5ft, Superlift radius 49.2ft, Superlift counterweight 463Klb,
Rear counterweight 330.7Klb, Carbody counterweight 88.2Klb

Radius (ft)	226.4	246.1	265.7	285.4	305.1	324.8	344.5	364.2	383.9	403.5	Radius (ft)
29.6	418.8*										29.6
35.0	418.8*	412.2*	405.6*								35.0
40.0	419.3*	412.8*	408.0*	354.9*	312.8*	269.1*	233.9*				40.0
45.0	422.6*	417.9*	409.7*	354.9*	311.1*	270.8*	235.5*				45.0
50.0	424.6*	417.5*	410.0*	354.9*	310.8*	271.1*	235.8*	205.9*	179.0*	156.5*	50.0
55.0	426.3*	418.3*	411.7*	354.9*	310.8*	270.3*	235.0*	205.7*	178.8*	156.2*	55.0
60.0	428.3	421.4*	414.7*	354.9*	310.8*	268.9*	233.6*	205.2*	178.6*	155.2*	60.0
65.0	431.6	423.0*	416.4*	354.9*	310.8*	268.9*	233.6*	205.2*	179.1*	154.2*	65.0
70.0	432.1	424.7	418.1	354.9*	310.8*	268.9*	233.6*	205.2*	176.8*	152.6*	70.0
75.0	434.0	427.3	420.7	354.9	310.8*	268.9*	233.6*	202.7*	172.9*	149.0*	75.0
80.0	434.3	429.0	419.9	354.5	310.8	268.5*	233.6*	198.1*	168.0*	144.0*	80.0
85.0	425.9	425.6	406.4	352.8	310.8	266.8*	233.6*	192.7*	163.2*	139.1*	85.0
90.0	406.5	400.2	393.0	352.7	309.2	266.7	233.6*	187.4*	158.5*	134.9*	90.0
95.0	384.2	379.6	374.3	347.4	308.6	265.7	233.6*	182.1*	153.6*	131.1*	95.0
100.0	362.3	361.8	354.5	339.0	308.1	265.0	232.6	177.1*	149.0*	127.6*	100.0
105.0	343.8	341.6	339.4	330.6	306.4	266.7	229.2	172.8*	145.0*	124.1*	105.0
110.0	325.3	324.8	322.6	320.5	306.4	265.0	224.2	168.4*	141.0*	120.5*	110.0
115.0	309.2	309.2	307.0	305.8	300.6	261.0	219.7	164.0*	137.5*	117.0*	115.0
120.0	294.7	294.1	292.5	290.3	289.7	253.4	215.5	159.7*	134.3*	113.8*	120.0
130.0	267.8	267.4	265.6	265.2	263.0	231.7	207.3	152.0*	127.9*	108.2*	130.0
140.0	245.4	245.4	243.2	243.2	241.0	213.6	199.1	145.3*	121.7*	102.8*	140.0
150.0	226.6	226.3	224.3	224.0	222.1	197.0	191.4	139.1*	116.3*	98.0*	150.0
160.0	210.4	209.8	208.2	207.3	205.8	181.5	184.5	133.2	111.7*	93.8*	160.0
170.0	195.1	194.6	193.1	192.2	190.7	166.0	178.4	127.5	107.1*	90.1*	170.0
180.0	182.0	181.6	180.0	179.2	177.5	152.9	173.3	122.7	103.4*	86.3*	180.0
190.0	170.0	169.6	168.2	167.3	165.6	140.8	164.8	118.6	100.1	83.1*	190.0
200.0		158.6	157.3	156.4	154.9	129.3	154.5	115.0	97.1	80.5*	200.0
210.0			147.4	146.5	145.0	118.1	144.8	111.9	94.1	77.8*	210.0
220.0			138.7	137.8	136.3	108.2	136.0	108.7	91.6	75.4*	220.0
230.0			130.5	129.8	128.2	98.4	128.0	105.9	89.4	73.3*	230.0
240.0				122.3	120.7	89.5	120.6	103.4	87.6	71.3*	240.0
250.0					113.7	81.8	113.7	101.3	86.0	69.5	250.0
260.0					107.5	72.9	107.3	99.6	84.4	68.4	260.0
270.0						64.9	101.6	98.0	83.2	67.2	270.0
280.0							96.2	95.0	82.3	66.2	280.0
290.0							91.0	90.2	81.7	65.3	290.0
300.0							86.2	85.5	81.4	64.7	300.0
310.0								81.0	79.9	64.3	310.0
320.0									77.1	64.1	320.0
330.0										64.2	330.0
340.0										64.7	340.0
350.0										64.0	350.0
354.3										63.7	354.3

Note:For values marked with "*", the superlift counterweight shall not leave the ground.

In the interest of continual equipment development, SANY America Inc. reserves the right to change these specifications at any time without prior notification.

Boom Combination of HJFJ



B	Boom base
6m	Boom insert
12mA	Boom insert
12mB	Boom insert
R	Tapered insert
	Boom tip
JB	Jib base
JT	Jib top
J6mA	Jib insert
J6mB	Jib insert
J12mB	Jib insert

Note:
1.The 39.4ft(12m) boom base and 34.4ft(10.5m) tapered insert are must. For jib combination, the 14.8ft(4.5m) jib base, 19.7ft(6m) luffing jib insert A, and 14.8ft(4.5m) jib top are must.
2.For combinations marked with "★", the mid-point suspension cable must be used, otherwise, the boom system may break.

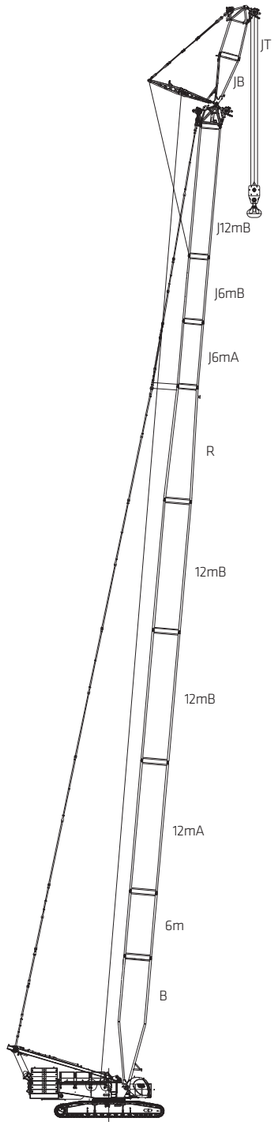

HJFJ onfiguration
(236.2ft~295.3ft)+29.5ft
(72m~90m)+9m

In the interest of continual equipment development, SANY America Inc. reserves the right to change these specifications at any time without prior notification.

Working Radius in HJFJ

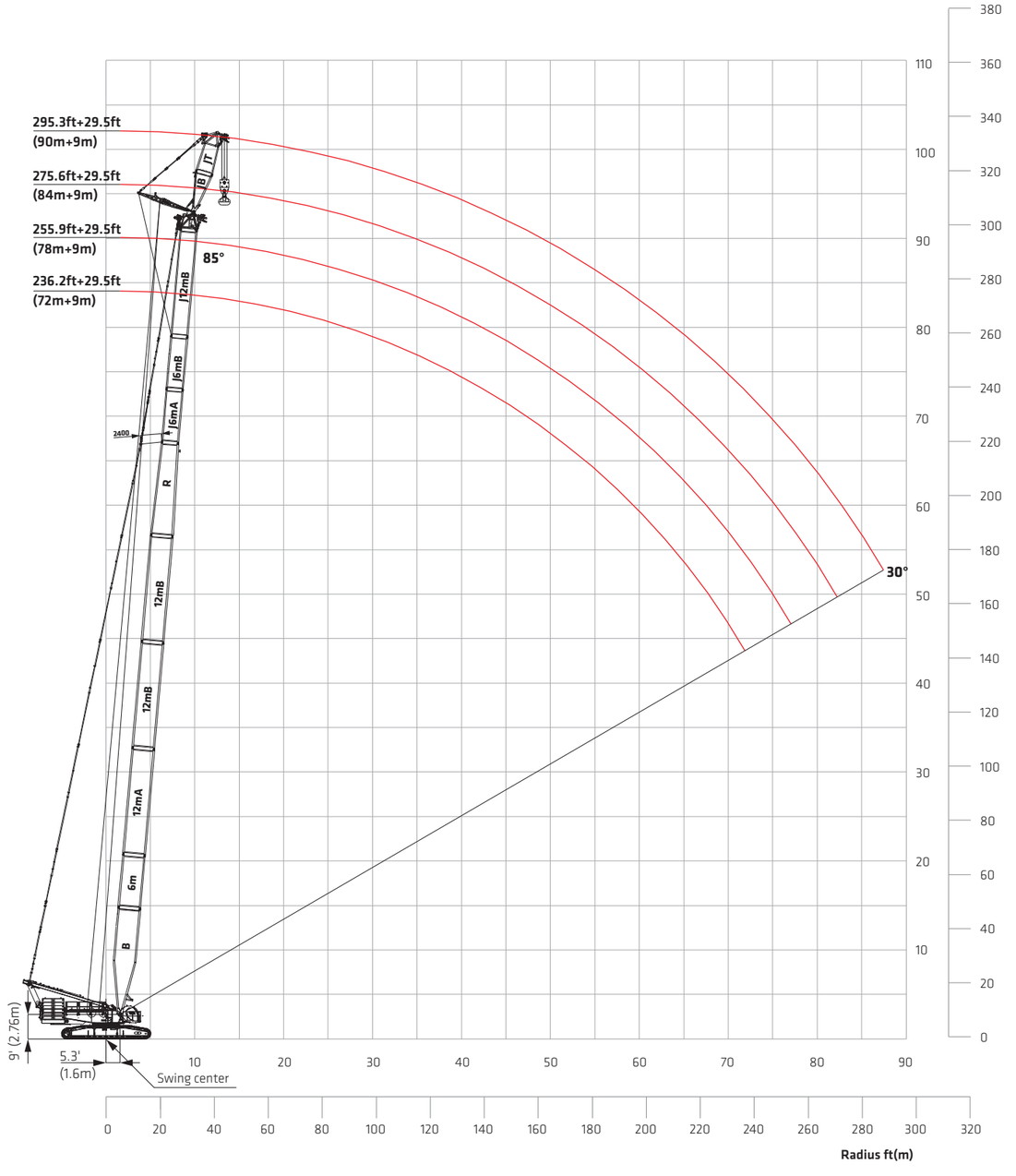

In the interest of continual equipment development, SANY America Inc. reserves the right to change these specifications at any time without prior notification.

Unit:klb

Load Chart of HJFJ

Note:
1.The rated load in the load chart is calculated complying with ASME B30.5;
2.The working radius is the horizontal distance from the load center to the center of turntable bearing;
3.The actual lifting capacity must subtract the weight of hooks and other riggings from the rated capacity in the load chart;
4.The load value is calculated when the object is hung freely,without considering the influence of wind on the load, ground conditions and slope, operation speed and the influence of any other negative factors over safe operation. Therefore, the operator bears the responsibility of making a judgment and decreasing the load and lowering speed;
5.All ratings are calculated when the machine is on firm and level ground with less than 1% gradient;
6.See the Operation Manual for the complete load charts of HJFJ Configuration.

HJFJ configuration load chart 1/3

Boom length 236.2~295.3ft, Jib length 29.5ft, Offset angle 10°, Rear counterweight 330.7klb, Carbody Counterweight 88.2klb

Radius (ft)	236.2	255.9	275.6	295.3	Radius (ft)
46.0	251.3	242.5	233.6		46.0
50.0	230.9	222.9	214.8		50.0
55.0	208.0	200.8	193.5	159.0	55.0
60.0	187.9	181.4	174.8	156.1	60.0
65.0	170.7	164.9	158.9	152.9	65.0
70.0	156.1	150.8	145.3	143.5	70.0
75.0	143.0	138.2	133.1	132.8	75.0
80.0	131.4	126.8	122.1	122.1	80.0
85.0	121.0	116.7	112.3	112.3	85.0
90.0	112.0	107.9	103.7	104.0	90.0
95.0	103.7	99.8	95.7	96.3	95.0
100.0	96.1	92.4	88.4	89.2	100.0
105.0	89.2	85.7	81.7	82.6	105.0
110.0	83.0	79.6	75.8	76.7	110.0
115.0	77.3	74.1	70.3	71.3	115.0
120.0	71.9	68.8	65.2	66.2	120.0
130.0	62.4	59.5	56.1	57.2	130.0
140.0	54.0	51.6	48.3	49.5	140.0
150.0	46.5	44.5	41.3	42.6	150.0
160.0	39.7	38.2	35.1	36.5	160.0
170.0	33.8	32.5	29.6	30.9	170.0
180.0	28.6	27.2	24.9	26.2	180.0
190.0	23.9	22.6	20.5	21.8	190.0
200.0	19.7	18.4	16.4	17.8	200.0
210.0	16.0	14.7	12.7	14.3	210.0
220.0	12.7	11.4	9.4	10.9	220.0
230.0	9.4	8.2	6.4	7.9	230.0
240.0		5.3	3.6	5.1	240.0
249.3		2.8	1.1	2.6	249.3

In the interest of continual equipment development, SANY America Inc. reserves the right to change these specifications at any time without prior notification.

Unit:klb

Load Chart of HJFJ

HJFJ configuration load chart 2/3

Boom length 236.2~295.3ft, Jib length 29.5ft, Offset angle 15°, Rear counterweight 330.7klb, Carbody Counterweight 88.2klb

Radius (ft)	236.2	255.9	275.6	295.3	Radius (ft)
46.0	253.5	244.7			46.0
50.0	233.0	225.1			50.0
55.0	210.0	202.9	195.7	147.1	55.0
60.0	189.8	183.3	176.8	144.7	60.0
65.0	172.5	166.7	160.9	141.6	65.0
70.0	157.7	152.4	147.0	139.8	70.0
75.0	144.5	139.7	134.6	133.4	75.0
80.0	132.7	128.3	123.6	123.4	80.0
85.0	122.3	118.1	113.6	113.6	85.0
90.0	113.1	109.1	104.8	105.2	90.0
95.0	104.8	100.9	96.8	97.3	95.0
100.0	97.2	93.5	89.5	90.0	100.0
105.0	90.1	86.6	82.8	83.5	105.0
110.0	83.9	80.5	76.8	77.6	110.0
115.0	78.0	74.8	71.2	72.1	115.0
120.0	72.6	69.5	66.0	67.0	120.0
130.0	63.0	60.2	56.8	57.9	130.0
140.0	54.7	52.1	49.0	50.1	140.0
150.0	47.0	45.0	41.9	43.1	150.0
160.0	40.1	38.6	35.6	36.9	160.0
170.0	34.0	32.7	30.0	31.4	170.0
180.0	28.8	27.6	25.1	26.5	180.0
190.0	24.1	22.9	20.7	22.1	190.0
200.0	19.9	18.6	16.6	18.1	200.0
210.0	16.0	14.7	12.9	14.3	210.0
220.0	12.7	11.4	9.6	11.1	220.0
230.0	9.4	8.2	6.5	8.0	230.0
240.0		5.3	3.6	5.1	240.0
249.3		2.8	1.1	2.6	249.3

In the interest of continual equipment development, SANY America Inc. reserves the right to change these specifications at any time without prior notification.

Unit:klb

Load Chart of HJFJ

HJFJ configuration load chart 3/3					
Boom length 236.2~295.3ft, Jib length 29.5ft, Offset angle 20°, Rear counterweight 330.7klb, Carbody Counterweight 88.2klb					
Radius (ft)	236.2	255.9	275.6	295.3	Radius (ft)
46.0	255.7				46.0
50.0	233.8				50.0
55.0	210.5	204.5	197.3	135.9	55.0
60.0	191.1	184.8	178.3	134.2	60.0
65.0	173.6	168.0	162.0	132.8	65.0
70.0	158.8	153.6	148.1	131.0	70.0
75.0	145.6	140.7	135.6	128.7	75.0
80.0	133.7	129.2	124.4	124.3	80.0
85.0	123.2	119.0	114.5	114.5	85.0
90.0	113.8	110.0	105.7	105.9	90.0
95.0	105.4	101.7	97.6	97.9	95.0
100.0	97.8	94.1	90.2	90.7	100.0
105.0	90.8	87.2	83.5	84.2	105.0
110.0	84.4	81.2	77.4	78.1	110.0
115.0	78.6	75.5	71.9	72.5	115.0
120.0	73.2	70.1	66.7	67.4	120.0
130.0	63.5	60.6	57.3	58.3	130.0
140.0	55.0	52.6	49.4	50.5	140.0
150.0	47.2	45.3	42.3	43.4	150.0
160.0	40.3	38.8	36.0	37.1	160.0
170.0	34.3	32.9	30.3	31.6	170.0
180.0	29.0	27.8	25.4	26.7	180.0
190.0	24.3	23.1	20.9	22.2	190.0
200.0	20.1	18.8	16.9	18.2	200.0
210.0	16.0	14.9	13.2	14.5	210.0
220.0	12.7	11.4	9.8	11.1	220.0
230.0	9.4	8.2	6.7	8.0	230.0
240.0		5.3	3.7	5.1	240.0
249.3		2.8	1.1	2.6	249.3

In the interest of continual equipment development, SANY America Inc. reserves the right to change these specifications at any time without prior notification.

Boom Combination in FJh

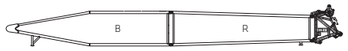

B	Boom base
R	Tapered insert
	Boom tip
	Jib base
	Jib top

Note:
The 78.7ft(24m) basic boom consists of 39.4ft(12m) boom base, 34.4ft(10.5m) tapered insert and 4.9ft(1.5m) boom tip. The 29.5ft(9m) jib combination of FJh Configuration is the same as that of HJFJ Configuration.

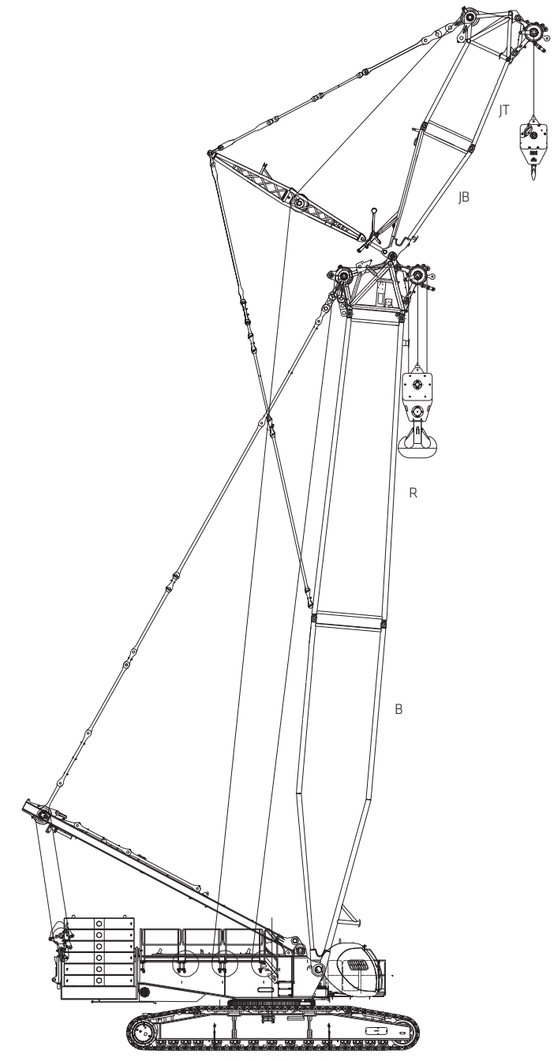

FJh Configuration
78.7ft+29.5ft
(24m+9m)

In the interest of continual equipment development, SANY America Inc. reserves the right to change these specifications at any time without prior notification.

Working Radius of FJh

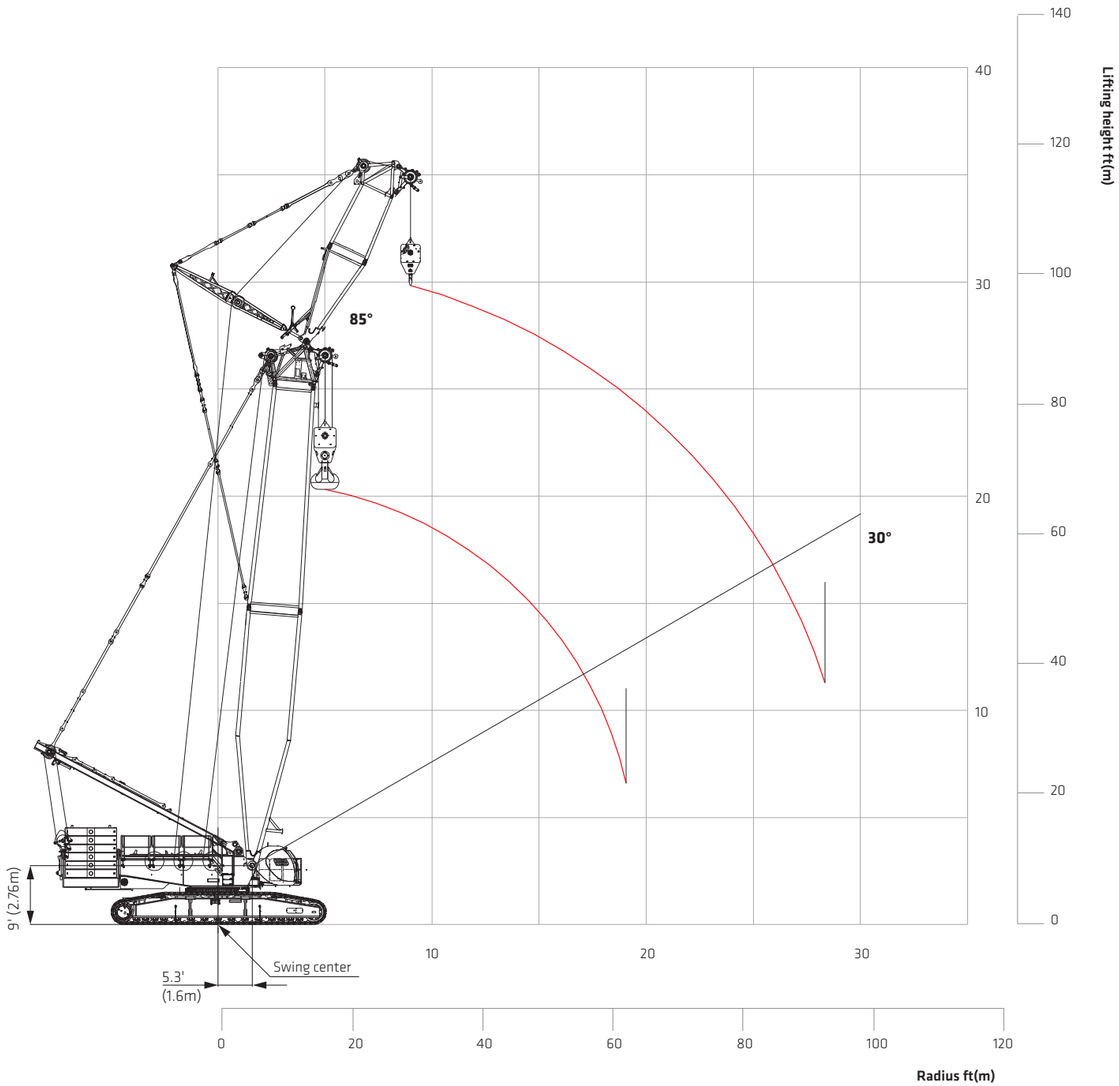

In the interest of continual equipment development, SANY America Inc. reserves the right to change these specifications at any time without prior notification.

Unit:klb

Load Chart of FJh

Note:
1.The rated load in the load chart is calculated complying with ASME B30.5;
2.The working radius is the horizontal distance from the load center to the center of turntable bearing;
3.The actual lifting capacity must subtract the weight of hooks and other riggings from the rated capacity in the load chart;
4.The load value is calculated when the object is hung freely,without considering the influence of wind on the load, ground conditions and slope, operation speed and the influence of any other negative factors over safe operation. Therefore, the operator bears the responsibility of making a judgment and decreasing the load and lowering speed;
5.All ratings are calculated when the machine is on firm and level ground with less than 1% gradient;
6.See the Operation Manual for the complete load charts of FJh Configuration.

FJh_H configuration load chart

Boom length 78.7ft, Jib length 29.5ft, Offset angle 20°, Rear counterweight 330.7klb, Carbody Counterweight 88.2klb

Radius(ft)	Boom length(ft)	Radius(ft)
	78.7	
18.1	881.8	18.1
20.0	877.4	20.0
25.0	761.7	25.0
30.0	610.2	30.0
35.0	495.2	35.0
40.0	416.8	40.0
45.0	347.9	45.0
50.0	296.8	50.0
55.0	255.6	55.0
60.0	222.3	60.0
65.0	197.5	65.0
70.0	176.4	70.0
72.1	167.5	72.1

FJh configuration load chart

Boom length 78.7ft, Jib length 29.5ft, Offset angle 20°, Rear counterweight 330.7klb, Carbody Counterweight 88.2klb

Radius(ft)	Boom length(ft)	Radius(ft)
	78.7	
32.9	368.1	32.9
35.0	357.8	35.0
40.0	334.9	40.0
45.0	316.5	45.0
50.0	299.3	50.0
55.0	274.1	55.0
60.0	241.9	60.0
65.0	215.7	65.0
70.0	194.2	70.0
75.0	175.7	75.0
80.0	159.6	80.0
85.0	145.6	85.0
90.0	133.9	90.0
95.0	123.3	95.0
100.0	113.5	100.0
104.9	104.7	104.9

In the interest of continual equipment development, SANY America Inc. reserves the right to change these specifications at any time without prior notification.

Boom Combination of FJhDB

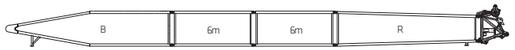

B	Boom base
6m	Boom insert
R	Tapered insert
	Boom tip
JB	Jib base
JT	Jib top

Note:
The 78.7ft(24m) basic boom consists of 39.4ft(12m) boom base, 34.4ft(10.5m) tapered insert and 4.9ft(1.5m) boom tip. For jib combination, the 14.8ft(4.5m) jib base, and 14.8ft(4.5m) jib top are must.

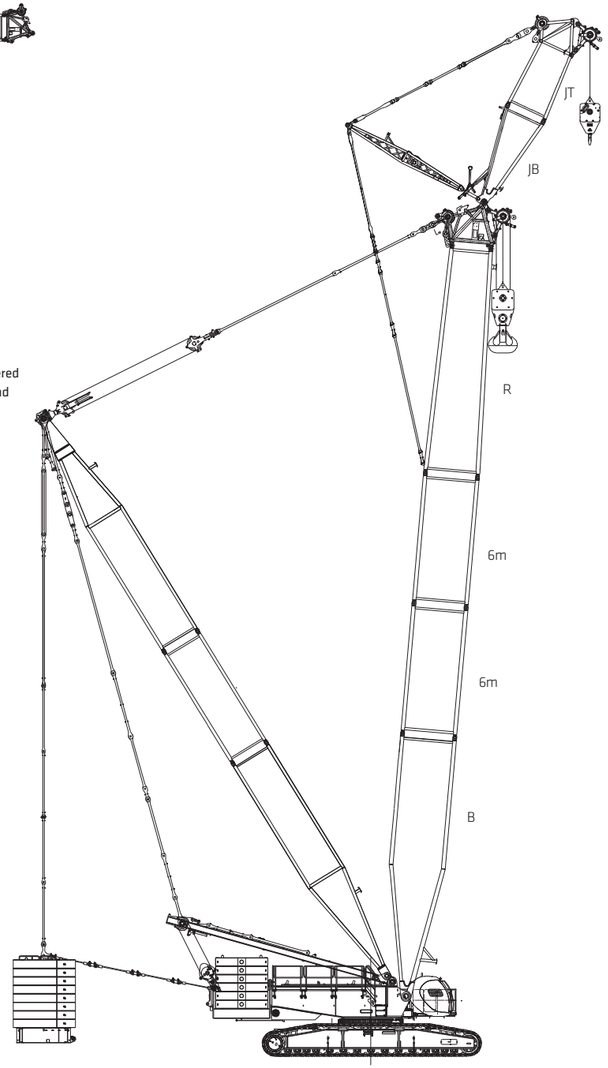

FJhDB Configuration
118.12ft+29.5ft
(36m+9m)

In the interest of continual equipment development, SANY America Inc. reserves the right to change these specifications at any time without prior notification.

Working Radius of FJhDB

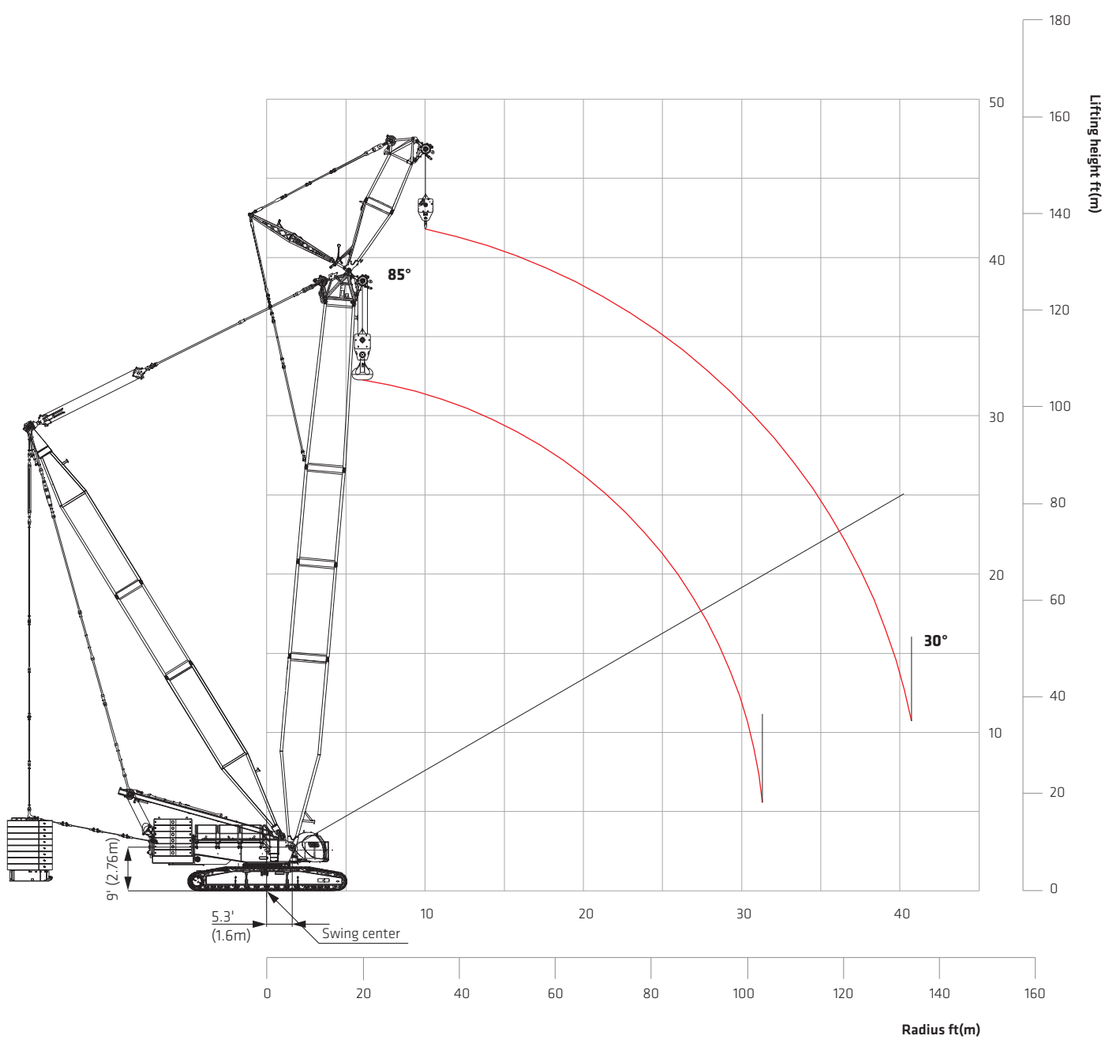

In the interest of continual equipment development, SANY America Inc. reserves the right to change these specifications at any time without prior notification.

Unit:klb

Load Chart of FJhDB

Note:
1.The rated load in the load chart is calculated complying with ASME B30.5;
2.The working radius is the horizontal distance from the load center to the center of turntable bearing;
3.The actual lifting capacity must subtract the weight of hooks and other riggings from the rated capacity in the load chart;
4.The load value is calculated when the object is hung freely,without considering the influence of wind on the load, ground conditions and slope, operation speed and the influence of any other negative factors over safe operation. Therefore, the operator bears the responsibility of making a judgment and decreasing the load and lowering speed;
5.All ratings are calculated when the machine is on firm and level ground with less than 1% gradient;
6.See the Operation Manual for the complete load charts of FJhDB Configuration.

FJhDB_H configuration load chart

Boom length 118.1~118.1ft, Jib length29.5ft, Boom to jib angle 20°, Superlift radius 49.2ft, Superlift counterweight 462,962lb, Rear counterweight 330,687lb, Carbody counterweight 88,183lb

Radius (ft)	Boom length (ft)	Radius (ft)
	118.1	
23.0	881.8*	23.0
25.0	881.8*	25.0
30.0	881.8*	30.0
35.0	881.8	35.0
40.0	877.4	40.0
45.0	842.1	45.0
50.0	764.4	50.0
55.0	686.3	55.0
60.0	620.3	60.0
65.0	566.6	65.0
70.0	521.6	70.0
75.0	481.7	75.0
80.0	446.5	80.0
85.0	416.2	85.0
90.0	389.2	90.0
95.0	365.4	95.0
100.0	344.1	100.0
104.9	324.0	104.9

Note:For values marked with "*", the superlift counterweight shall not leave the ground.

In the interest of continual equipment development, SANY America Inc. reserves the right to change these specifications at any time without prior notification.

Unit:klb

Load Chart of FJhDB

FJhDB configuration load chart

Boom length 118.1~118.1ft, Jib length29.5ft, Boom to jib angle 20°, Superlift radius 49.2ft, Superlift counterweight 462,962lb, Rear counterweight 330,687lb, Carbody counterweight 88,183lb

Radius (ft)	Boom length(ft)	Radius (ft)
	29.5	
36.1	372.5*	36.1
40.0	359.2*	40.0
45.0	340.7*	45.0
50.0	326.3*	50.0
55.0	312.9*	55.0
60.0	300.1*	60.0
65.0	290.0*	65.0
70.0	279.9*	70.0
75.0	269.8*	75.0
80.0	260.6*	80.0
85.0	253.9*	85.0
90.0	245.6*	90.0
95.0	239.3*	95.0
100.0	234.8*	100.0
105.0	231.4*	105.0
110.0	226.4*	110.0
115.0	221.8	115.0
120.0	217.7	120.0
130.0	211.4	130.0
131.2	210.7	131.2

Note:For values marked with "*", the superlift counterweight shall not leave the ground.

In the interest of continual equipment development, SANY America Inc. reserves the right to change these specifications at any time without prior notification.

Boom Combination in LJ

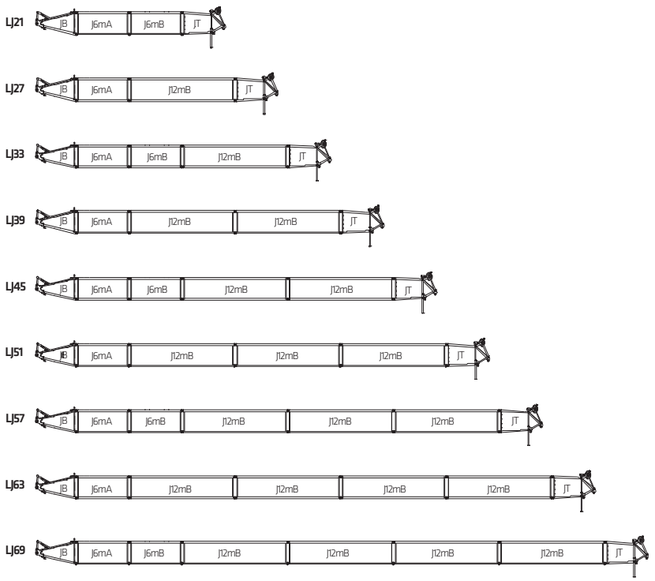

B	Boom base
6m	Boom insert
12mA	Boom insert
12mB	Boom insert
R	Tapered insert
	Boom tip
	Jib base
	Jib top
J6mA	Jib insert
J6mB	Jib insert
J12mB	Jib insert

Note: The 118.1ft~196.9ft(36m~60m) boom combination is the same as that of the H Configuration. For jib combination, the 14.8ft(4.5m) jib base, 19.7ft(6m) luffing jib insert A, and 14.8ft(4.5m) jib top are must.

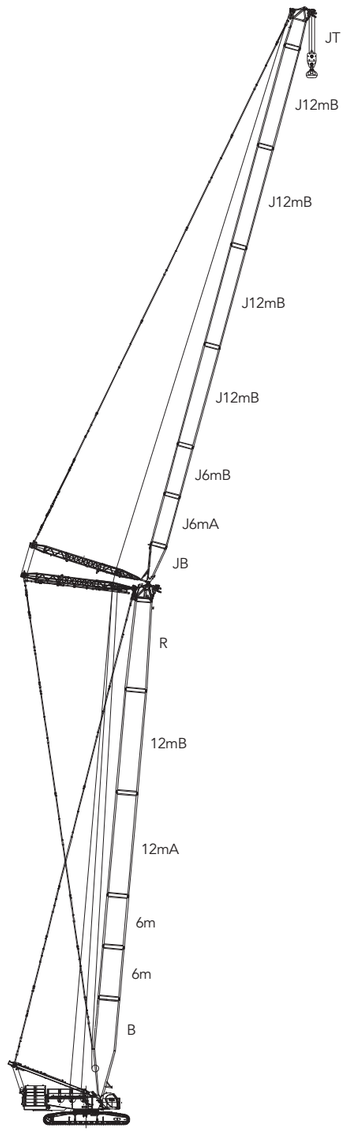

LJ Configuration
(118.1ft~196.9ft)+(68.9ft~226.4ft)
(36m~60m)+(21m~69m)

In the interest of continual equipment development, SANY America Inc. reserves the right to change these specifications at any time without prior notification.

Working Radius in LJ

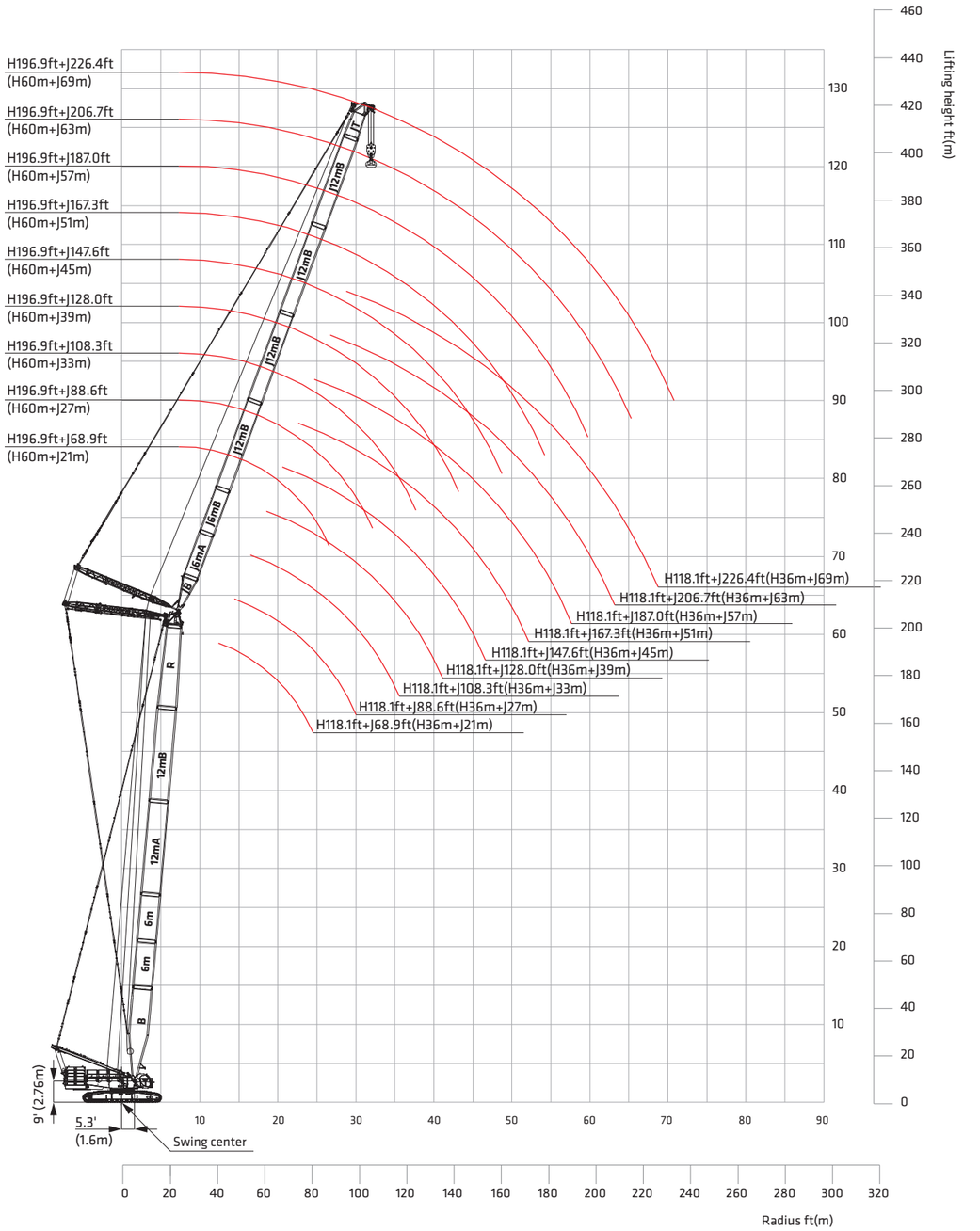

In the interest of continual equipment development, SANY America Inc. reserves the right to change these specifications at any time without prior notification.

Unit:klb

Load Chart of LJ

Note:
1.The rated load in the load chart is calculated complying with ASME B30.5;
2.The working radius is the horizontal distance from the load center to the center of turntable bearing;
3.The actual lifting capacity must subtract the weight of hooks and other riggings from the rated capacity in the load chart;
4.The load value is calculated when the object is hung freely,without considering the influence of wind on the load, ground conditions and slope, operation speed and the influence of any other negative factors over safe operation. Therefore, the operator bears the responsibility of making a judgment and decreasing the load and lowering speed;
5.All ratings are calculated when the machine is on firm and level ground with less than 1% gradient;
6.See the Operation Manual for the complete load charts of LJ Configuration.

LJ configuration load chart 1/3

Boom length 118.1ft, Boom angle 85°, Jib length 68.9~226.4ft, Rear counterweight 330.7klb, Carbody Counterweight 88.2klb

Radius (ft)	Jib length (ft)									Radius (ft)
	68.9	88.6	108.3	128.0	147.6	167.3	187.0	206.7	226.4	
39.4	368.1									39.4
40.0	363.0									40.0
45.0	322.7									45.0
50.0	290.6	281.8								50.0
55.0	263.7	255.8	246.9							55.0
60.0	241.2	234.7	226.2	219.7	214.1					60.0
65.0	222.7	217.1	209.9	204.0	197.9					65.0
70.0	207.3	201.6	195.2	189.9	184.2	179.2				70.0
75.0	193.4	187.9	182.0	177.1	171.9	167.2	162.3			75.0
80.0		175.8	170.2	165.6	160.8	156.5	151.9	147.8		80.0
85.0		165.1	159.8	155.5	150.9	147.1	142.7	138.9		85.0
90.0		154.8	150.6	146.7	142.4	138.7	134.6	131.0	126.7	90.0
95.0		144.7	142.3	138.7	134.5	131.0	127.1	123.7	120.1	95.0
100.0			134.3	131.4	127.3	124.0	120.3	117.1	113.6	100.0
105.0			126.3	124.5	120.7	117.7	114.1	111.0	107.5	105.0
110.0			118.9	118.3	114.9	112.0	108.6	105.7	102.3	110.0
115.0			111.9	111.8	109.5	106.7	103.4	100.5	97.3	115.0
120.0				105.6	104.2	101.8	98.5	95.7	92.7	120.0
130.0				94.9	94.0	92.9	89.8	87.4	84.5	130.0
140.0					85.1	84.5	82.6	80.2	77.5	140.0
150.0					77.2	76.8	75.6	73.8	71.1	150.0
160.0						69.9	68.8	67.9	65.5	160.0
170.0						64.0	62.9	62.0	60.4	170.0
180.0							57.8	56.9	55.7	180.0
190.0							53.1	52.4	51.2	190.0
200.0								48.3	47.1	200.0
210.0									43.4	210.0
220.0									40.0	220.0
230.0									36.9	230.0
236.2									35.0	236.2

In the interest of continual equipment development, SANY America Inc. reserves the right to change these specifications at any time without prior notification.

Unit:klb

Load Chart of LJ

LJ configuration load chart 2/3

Boom length 157.5ft, Boom angle 85°, Jib length 68.9~226.4ft, Rear counterweight 330.7klb, Carbody Counterweight 88.2klb

Radius (ft)	Jib length (ft)									Radius (ft)
	68.9	88.6	108.3	128.0	147.6	167.3	187.0	206.7	226.4	
46.0	291.0									46.0
50.0	269.1									50.0
55.0	244.7	236.8	229.0							55.0
60.0	224.0	217.5	211.5	205.4						60.0
65.0	207.9	202.2	195.7	190.3						65.0
70.0	193.5	188.3	182.2	177.3	171.7					70.0
75.0	180.6	175.8	170.2	165.6	160.5	156.3				75.0
80.0	169.2	164.8	159.4	155.3	150.5	146.6	142.0	138.1		80.0
85.0	159.3	154.9	149.8	146.0	141.6	137.8	133.6	129.9		85.0
90.0		146.2	141.5	137.9	133.6	130.0	126.0	122.6	116.8	90.0
95.0		138.4	133.9	130.4	126.4	123.0	119.2	116.0	112.2	95.0
100.0		131.3	126.9	123.7	119.7	116.7	113.0	109.9	106.2	100.0
105.0			120.5	117.4	113.7	110.6	107.1	104.2	100.7	105.0
110.0			114.8	111.9	108.2	105.4	101.9	99.2	95.8	110.0
115.0			109.6	106.7	103.1	100.4	97.1	94.5	91.2	115.0
120.0			104.3	101.9	98.4	95.8	92.7	90.1	86.8	120.0
130.0				93.3	90.2	87.6	84.6	82.2	79.1	130.0
140.0				84.8	83.1	80.7	77.8	75.4	72.6	140.0
150.0					76.1	74.5	71.7	69.4	66.7	150.0
160.0						68.7	66.2	64.0	61.4	160.0
170.0						63.1	61.3	59.3	56.7	170.0
180.0							56.8	55.1	52.6	180.0
190.0							52.3	51.2	48.9	190.0
200.0								47.5	45.5	200.0
210.0									42.3	210.0
220.0									39.2	220.0
230.0									36.2	230.0
236.2									34.3	236.2

In the interest of continual equipment development, SANY America Inc. reserves the right to change these specifications at any time without prior notification.

Load Chart of LJ

LJ configuration load chart 3/3

Boom length 196.9ft, Boom angle 85°, Jib length 68.9~226.4ft, Rear counterweight 330.7klb, Carbody Counterweight 88.2klb

Radius (ft)	Jib length (ft)									Radius (ft)
	68.9	88.6	108.3	128.0	147.6	167.3	187.0	206.7	226.4	
46.0	253.5									46.0
50.0	242.5									50.0
55.0	226.6	218.9								55.0
60.0	208.7	202.8	195.9							60.0
65.0	193.2	188.1	181.8							65.0
70.0	180.1	175.3	169.6	165.0						70.0
75.0	168.5	164.0	158.7	154.5	149.5	145.5				75.0
80.0	158.1	154.0	149.0	145.1	140.3	136.6	131.3			80.0
85.0	148.7	144.9	140.3	136.5	132.1	128.5	124.3			85.0
90.0		137.1	132.5	129.0	124.9	121.6	117.5	112.1		90.0
95.0		129.9	125.4	122.2	118.3	115.1	111.2	107.8	97.7	95.0
100.0		123.3	118.9	115.9	112.1	109.1	105.4	102.5	95.6	100.0
105.0			113.0	110.2	106.4	103.6	100.0	97.2	93.2	105.0
110.0			107.8	105.0	101.4	98.7	95.3	92.5	89.2	110.0
115.0			103.0	100.1	96.7	94.0	90.9	88.1	85.0	115.0
120.0			98.4	95.7	92.3	89.8	86.7	84.0	81.0	120.0
130.0				87.8	84.6	82.2	79.1	76.7	73.8	130.0
140.0				81.1	78.0	75.7	72.8	70.5	67.6	140.0
150.0					72.0	69.8	67.0	64.9	62.1	150.0
160.0						64.5	61.9	59.9	57.2	160.0
170.0						60.0	57.3	55.3	52.7	170.0
180.0						55.9	53.3	51.4	48.8	180.0
190.0							49.7	47.8	45.2	190.0
200.0								44.4	42.0	200.0
210.0								41.4	39.0	210.0
220.0								38.7	36.4	220.0
230.0									33.9	230.0
236.2									32.4	236.2

In the interest of continual equipment development, SANY America Inc. reserves the right to change these specifications at any time without prior notification.

Boom Combination in LJDB

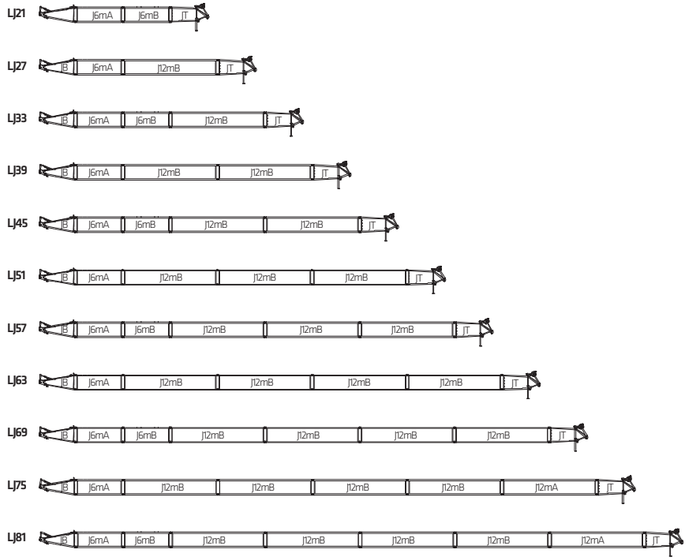

B	Boom base
6m	Boom insert
12mA	Boom insert
12mB	Boom insert
R	Tapered insert
	Boom tip
B	Jib base
JT	Jib top
J6mA	Jib insert
J6mB	Jib insert
J12mA	Jib insert
J12mB	Jib insert

Note: The 118.1ft~275.6ft(36m~84m) boom combination is the same as that of the H Configuration.
For jib combination, the 14.8ft(4.5m) jib base, 19.7ft(6m) luffing jib insert A, and 14.8ft(4.5m) jib top are must.

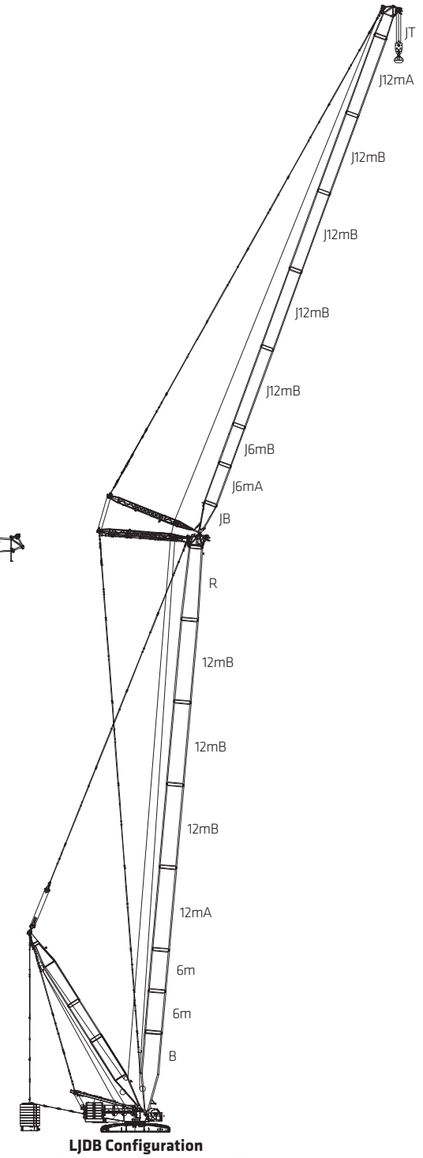

LJDB Configuration
(118.1ft~275.6ft)+(68.9ft~265.7ft)
(36m~84m)+(21m~81m)

In the interest of continual equipment development, SANY America Inc. reserves the right to change these specifications at any time without prior notification.

Unit:klb

Working Radius in LJDB

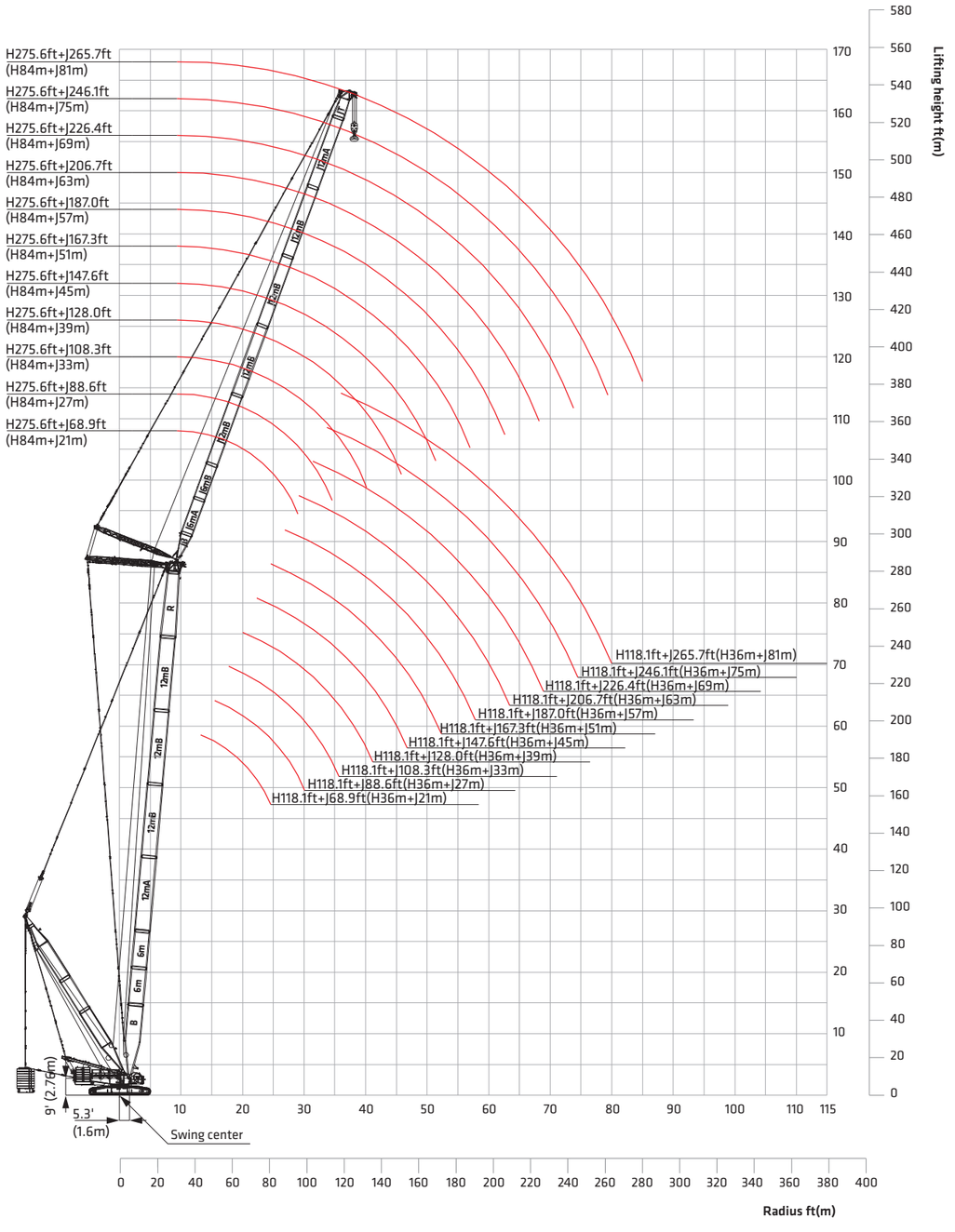

In the interest of continual equipment development, SANY America Inc. reserves the right to change these specifications at any time without prior notification.

Unit:klb

Load Chart of LJDB

Note:
1.The rated load in the load chart is calculated complying with ASME B30.5;
2.The working radius is the horizontal distance from the load center to the swing center;
3.The actual lifting capacity must subtract the weight of hooks and other riggings from the rated capacity in the load chart;
4.The load value is calculated when the object is hung freely,without considering the influence of wind on the load, ground conditions and slope, operation speed and the influence of any other negative factors over safe operation. Therefore, the operator bears the responsibility of making a judgment and decreasing the load and lowering speed;
5.All ratings are calculated when the machine is parking on firm and level ground with less than 1% gradient;
6.See the Operation Manual for the complete load charts of LJDB Configuration.

LJDB configuration load chart

Boom length 275.6ft, Boom angle 85°, Jib length 68.9~265.7ft, Superlift Counterweight Radius 49.2ft
Superlift Counterweight 463.0klb, Rear counterweight 330.7klb, Carbody Counterweight 88.2klb

Radius (ft)	Jib length (ft)											Radius (ft)
	68.9	88.6	108.3	128.0	147.6	167.3	187.0	206.7	226.4	246.1	265.7	
52.5	229.2*											52.5
55.0	226.7*											55.0
60.0	221.8*	197.6*										60.0
65.0	217.2*	193.8*										65.0
70.0	211.5*	189.8*	168.2*									70.0
75.0	205.5*	185.4*	165.3*	146.2*								75.0
80.0	199.7*	181.0*	162.0*	144.0*	127.4*	111.7*						80.0
85.0	194.3*	176.6*	158.7*	141.6*	125.9*	110.7*						85.0
90.0	189.5*	172.2*	155.3*	139.1*	124.1*	109.8*	96.1*					90.0
95.0		168.0*	151.9*	136.6*	122.2*	108.7*	95.3*	83.0*				95.0
100.0		163.9*	148.6*	134.0*	120.4*	107.3*	94.4*	82.4*	71.4*	61.4*		100.0
105.0		160.0*	145.2*	131.3*	118.6*	106.0*	93.4*	81.7*	70.9*	61.0*	52.0*	105.0
110.0		156.3*	142.0*	128.7*	116.5*	104.5*	92.4*	81.1*	70.4*	60.7*	51.6*	110.0
115.0			138.6*	126.1*	114.5*	103.0*	91.3*	80.3*	69.9*	60.2*	51.3*	115.0
120.0			134.1*	123.6*	112.5*	101.5*	90.1*	79.4*	69.4*	59.8*	51.0*	120.0
130.0			123.1*	116.0*	108.5*	98.2*	87.8*	77.8*	68.0*	58.9*	50.3*	130.0
140.0				107.0*	101.2*	94.4*	85.4*	75.9*	66.7*	57.8*	49.5*	140.0
150.0					93.7*	89.2*	82.4*	74.0*	65.2*	56.6*	48.6*	150.0
160.0					86.6*	82.8*	78.4*	71.8*	63.7*	55.4*	47.8*	160.0
170.0					80.4*	76.6*	73.2*	69.1*	62.2*	54.3*	46.7*	170.0
180.0						71.3*	68.2*	64.9*	60.7*	53.2*	45.7*	180.0
190.0							63.5*	60.6*	57.8*	52.0*	44.7*	190.0
200.0							59.1*	56.6*	54.2*	50.4*	43.7*	200.0
210.0								53.1*	50.6*	48.2*	42.5*	210.0
220.0								49.5*	47.3*	45.0*	38.5*	220.0
230.0									44.4*	42.3*	34.8*	230.0
240.0									41.8*	39.8*	31.4*	240.0
250.0										37.5*	28.4*	250.0
260.0										34.6*	25.6*	260.0
270.0											23.0*	270.0
275.5											21.6*	275.5

In the interest of continual equipment development, SANY America Inc. reserves the right to change these specifications at any time without prior notification.

In the interest of continual equipment development, SANY America Inc. reserves the right to change these specifications at any time without prior notification.

In the interest of continual equipment development, SANY America Inc. reserves the right to change these specifications at any time without prior notification.

Service

When we say that SANY machines are built to endure, we're really talking about service. SANY equipment is intentionally designed to be easily and efficiently serviced, with features such as wide compartment doors and easy access to make maintenance more efficient. Because ease of service means back in service.

We've Got Your Back

To provide peace of mind and ensure maximum uptime, all SANY cranes are backed by a robust 3-year/3,000-hour standard warranty. That's our commitment to keeping your fleet running at peak performance.



*Warranty applies to 2026 Crane models only.

SANY America Inc.

318 Sany Way

Peachtree City | GA 30269

| T | 470-552-SANY

***WARRANTY APPLIES TO 2026 MODELS**

CRABR26SCA4000A001

sanyamerica.com

In the interest of continual equipment development, SANY America Inc. reserves the right to change these specifications at any time without prior notification.

© 2026 SANY AMERICA INC.